VS_1SPEC -Ref10-05-23_01

TECHNICAL SET

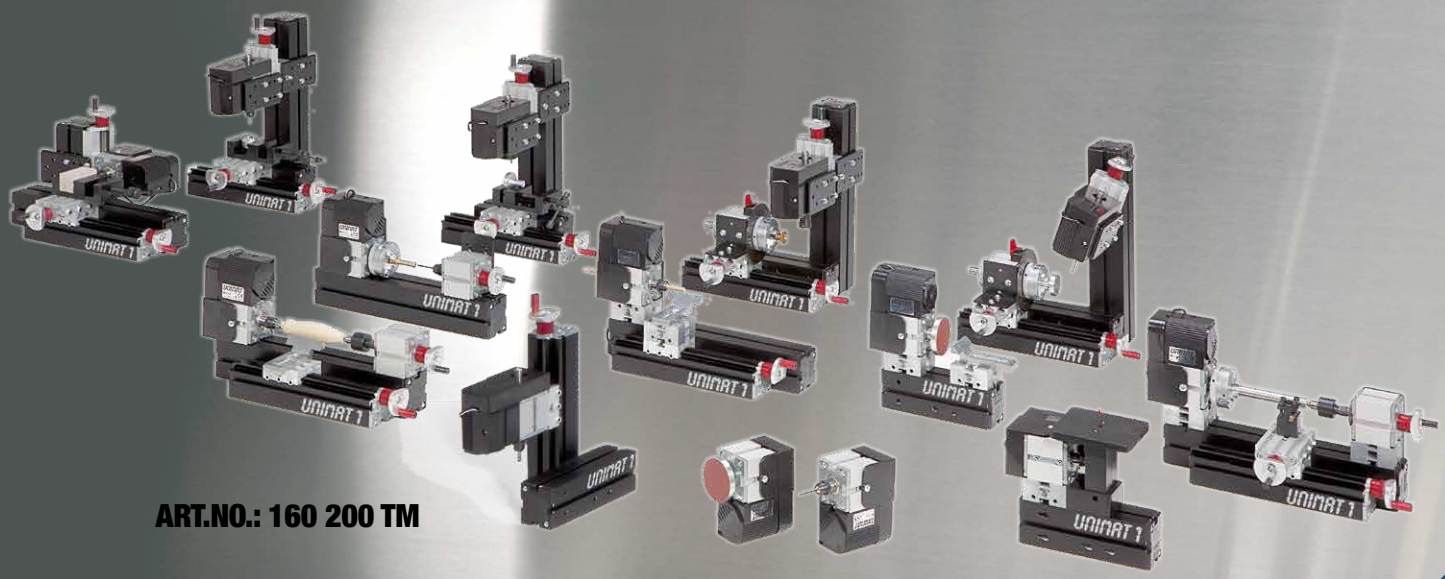

ART.NO.: 160 200 TM

MADE IN AUSTRIA

Silver medal Inventions Vienna

Médaille d'argent Inventions Genève

Worlddidac Award

Silver medal Nuremberg

PROFESSIONAL POWER METAL LINE

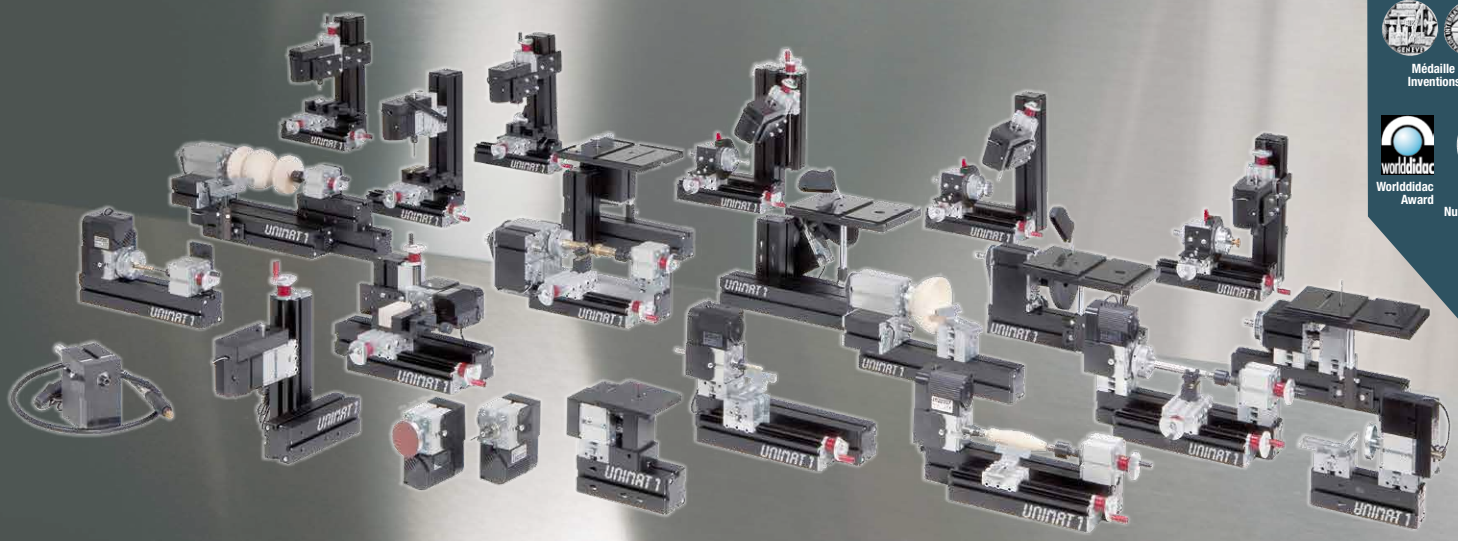

ART.NO.: 160 200 PM

[SPEZIAL - MASCHINEN]

[SPECIAL - MACHINES]

[MACHINES - SPÉCIALES]

[MÁQUINAS - ESPECIALES]

The tool est. 1982 QUALITY PRODUCT MADE IN AUSTRIA

Inhaltsverzeichniss • Directory • Contenu • Contenido

Zahnradfräsmaschine	Metall Gear milling machine	Machines de bijoutier	Fresadora de engranajes	4 - 6
5-Achsenfräse	5 axis milling machine	Fraiseuse de 5-axes	Fresadora con 5-ejes	7 - 9
6-Achsenfräse	6 axis milling machine	Fraiseuse de 6- axes	Fresadora con 6 ejes	10 - 12
Planfräse	Fly cutting machine	Fraiseuse con tête d'alésage	Fresadora aplanado	13 - 15
Handfräsmaschine	Hand-held milling machine	Défonceuse	Fresadora	16 - 17
Standbohrmaschine	Drillpress	Perceuse verticale	Taladradora vertical	18 - 20
Standbohrmaschine ML	Drillpress ML	Perceuse verticale ML	Taladradora vertica ML	21 - 22
Stichsäge ML/PL	Jig saw ML/PL	Scie sauteuse	Sierra da calar	23 - 24
Tisch- und Profilfräse	Table mill	Fraise à profiler	Fresadora de perfiles	25 - 27
Kreissäge	Circular saw	Scie circulaire	Sierra circular	28 - 29
Kreissäge schräg	Circular saw tilted	Scie circulaire	Sierra circular	30 - 32
Zentrierbohr-maschine	Center drilling machine	Perceuse à centrer	Taladradora de centrar	33 - 34
Power - Drechselbank	Power - wood lathe	Grand tour à bois	Torno de madera grande	35 - 36
Querholz-drechseln	Faceplate turning	Tournage de bois taillé contre les fibres	Tornear traviesas	37 - 38
Power Drehbank	Power lathe	Grand tour	Torno de metal rande	39 - 41
Schleifmaschine	Sanding machine	Ponceuse	Lijadora	42 - 43
Filigran-drechselbank	Small wood lathe	Mini tour à bois	Mini torno de madera	44 - 46

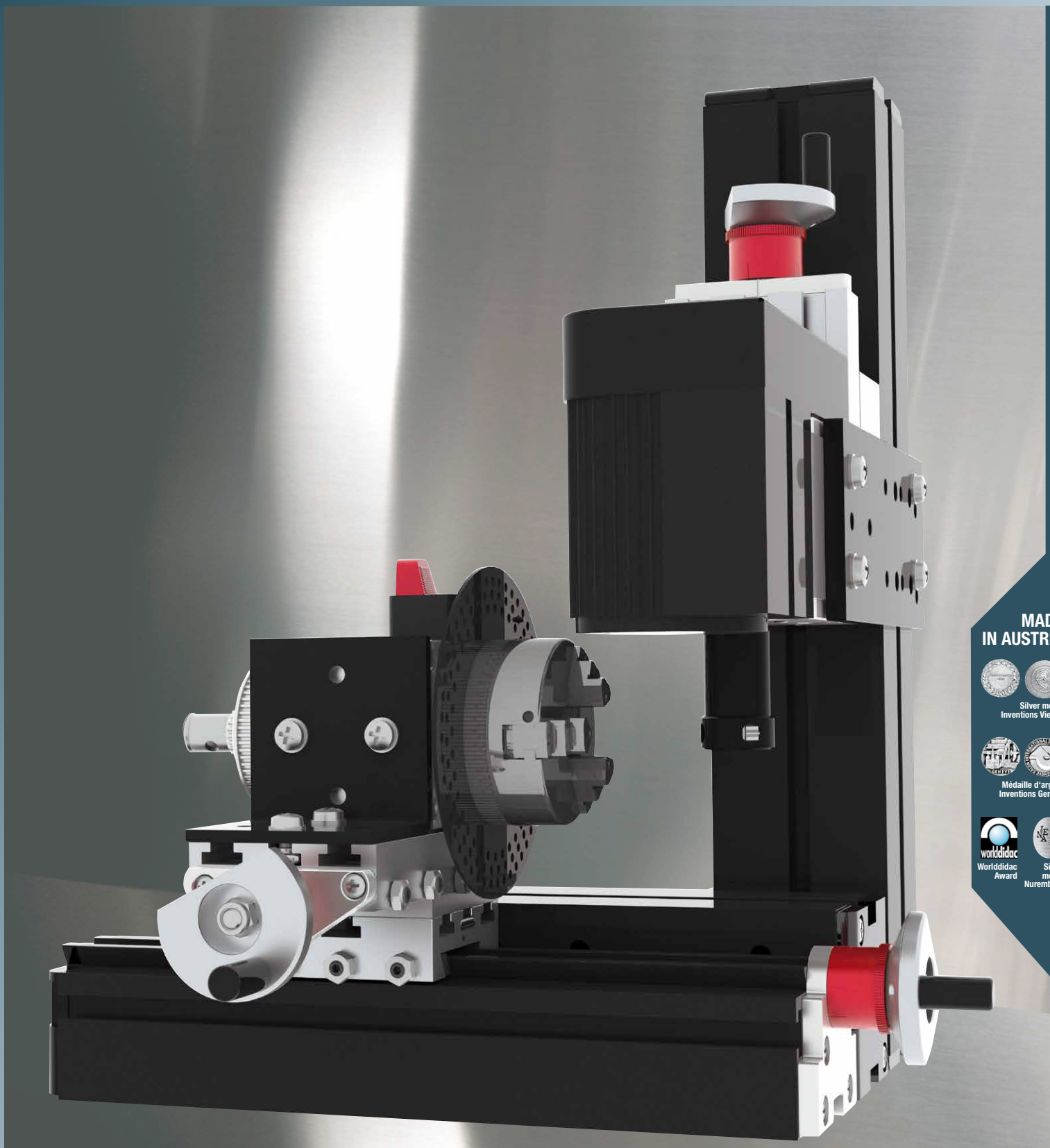

VS_166044-Ref19-11-14

MADE IN AUSTRIA

Silver medal Inventions Vienna

Médaille d'argent Inventions Genève

Worlddidac Award

Silver medal Nuremberg

[ZAHNRADFRÄSMASCHINE]

[METALL GEAR MILLING MACHINE]

[MACHINES DE BIJOUTIER]

[FRESADORA DE ENGRANAJES]

The tool 1881 est. 1982 QUALITY PRODUCT MADE IN AUSTRIA

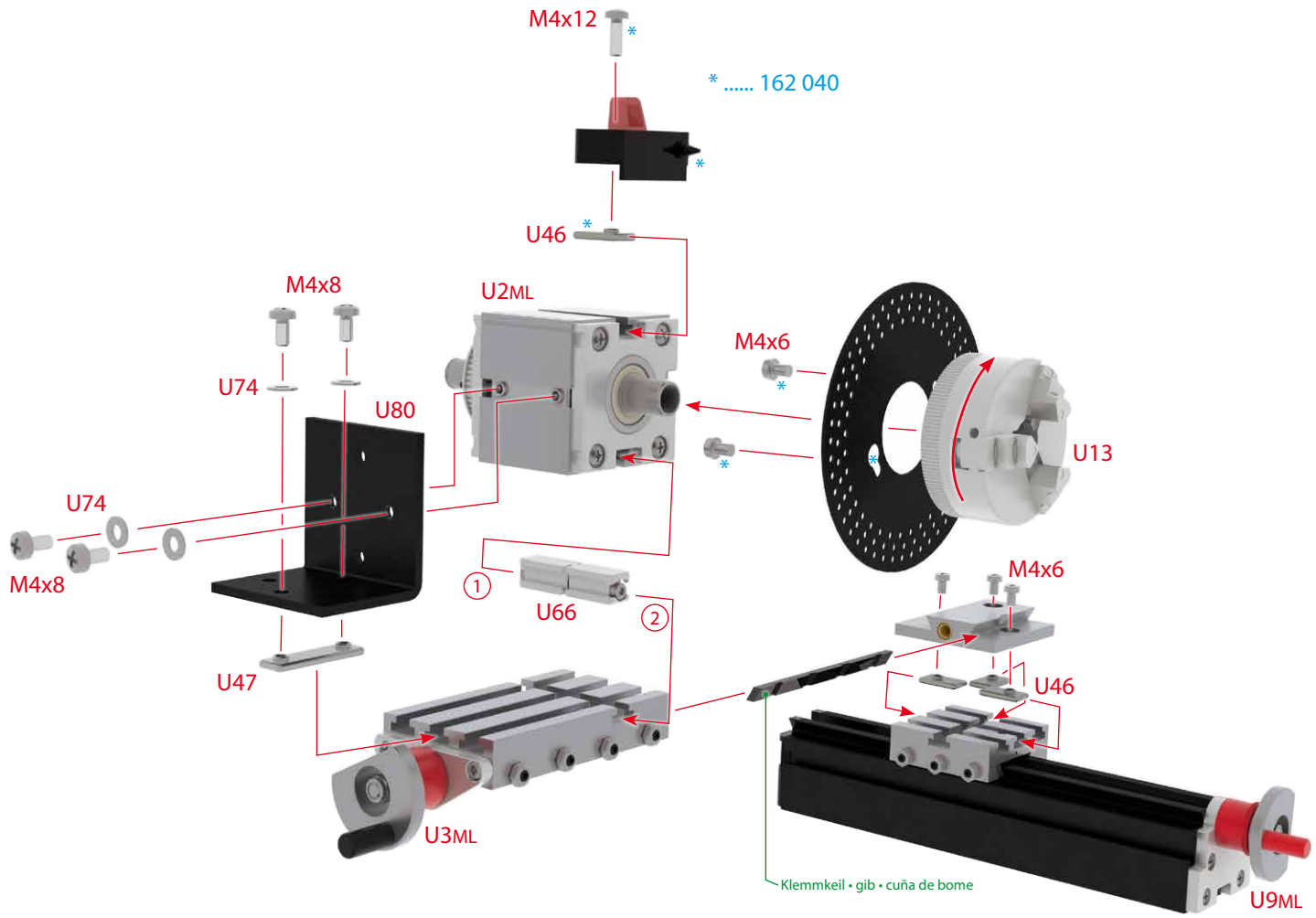
M4x12
* 162 040
U46
M4x8
U2ML
M4x6
U74
U80
U13
U74
M4x8
1
U66
2
M4x6
U47
U46
U3ML
Klemmkeil • gib • cuña de bome
U9ML

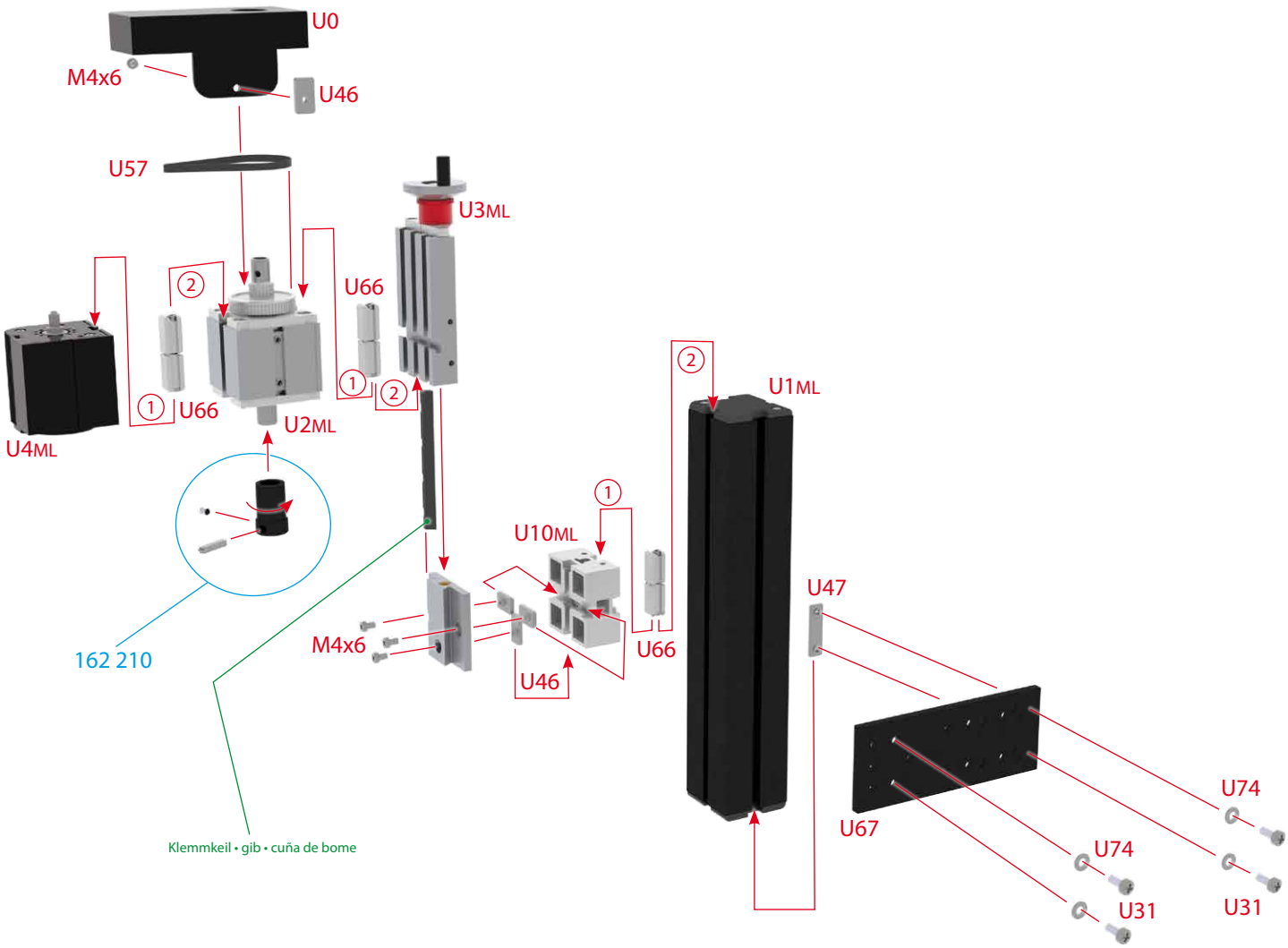
U0
M4x6
U46
U57
U3ML
2
U66
1
2
1
U66
U2ML
U4ML
2
U1ML
1
U10ML
U47
162 210
M4x6
U66
U46
U67
U74
U74
U31
U31
Klemmkeil • gib • cuña de bome

U66
U47
M4x6
U66
U47
U80
U7ML
U47
U74
M4x8
U74
M4x8

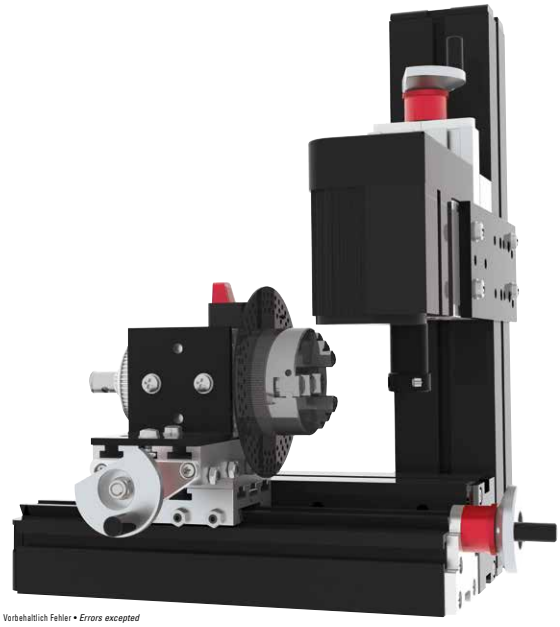

Vorbehaltlich Fehler • *Errors excepted*

The cool tool® GmbH est. 1982
www.thecooltool.com
Fabriksgasse 15 | 2340 Mödling
Phone +43 2236 892 666 | AUSTRIA
contact us at info@thecooltool.com

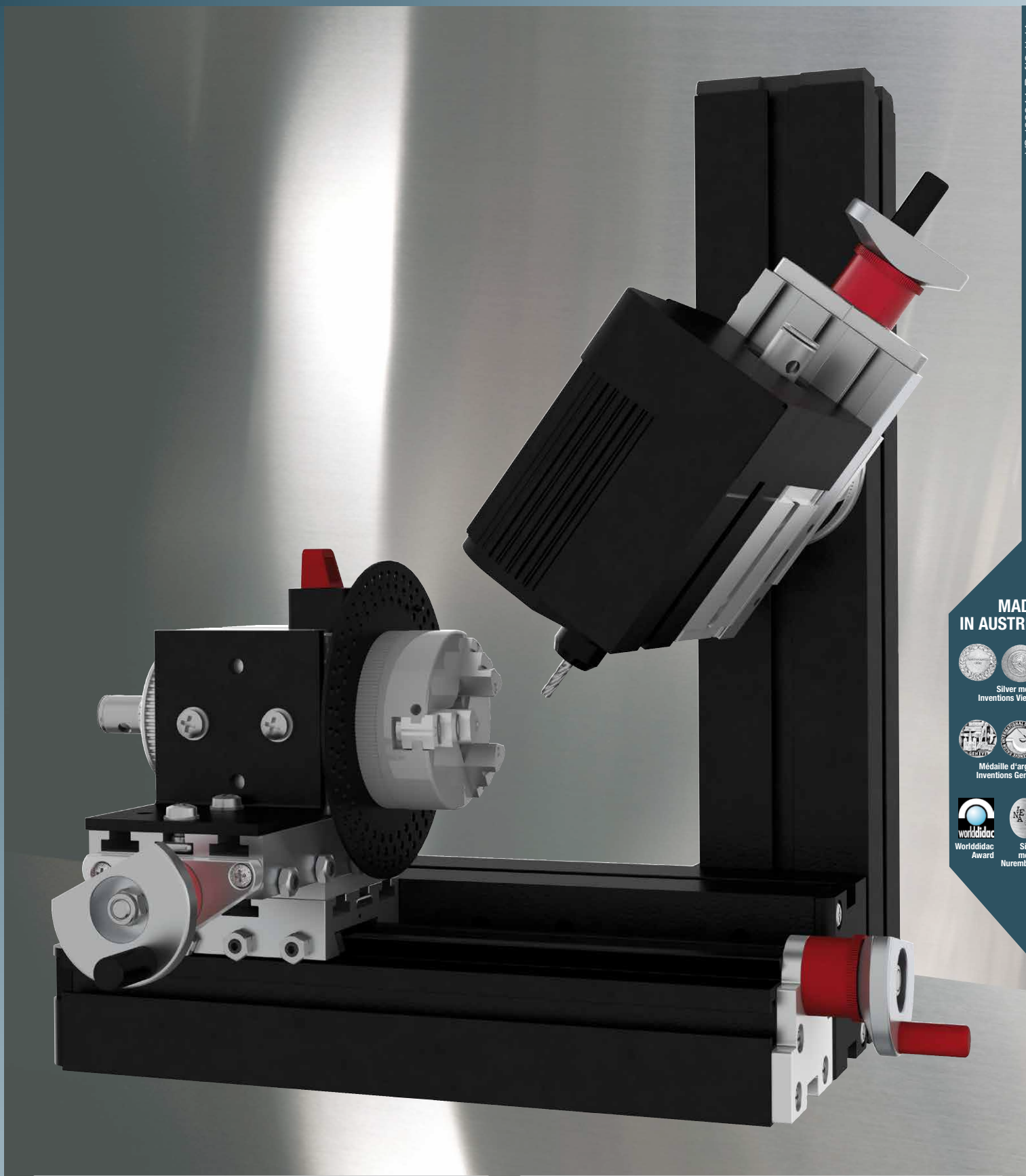

VS_166044-Ref19-11-14

MADE IN AUSTRIA

Silver medal Inventions Vienna

Médaille d'argent Inventions Genève

Worlddidac Award

Silver medal Nuremberg

[5-ACHSENFRÄSE]

[5 AXIS MILLING MACHINE]

[FRAISEUSE DE 5-AXES]

[FRESADORA CON 5-EJES]

The tool 1881 est. 1982 QUALITY PRODUCT MADE IN AUSTRIA

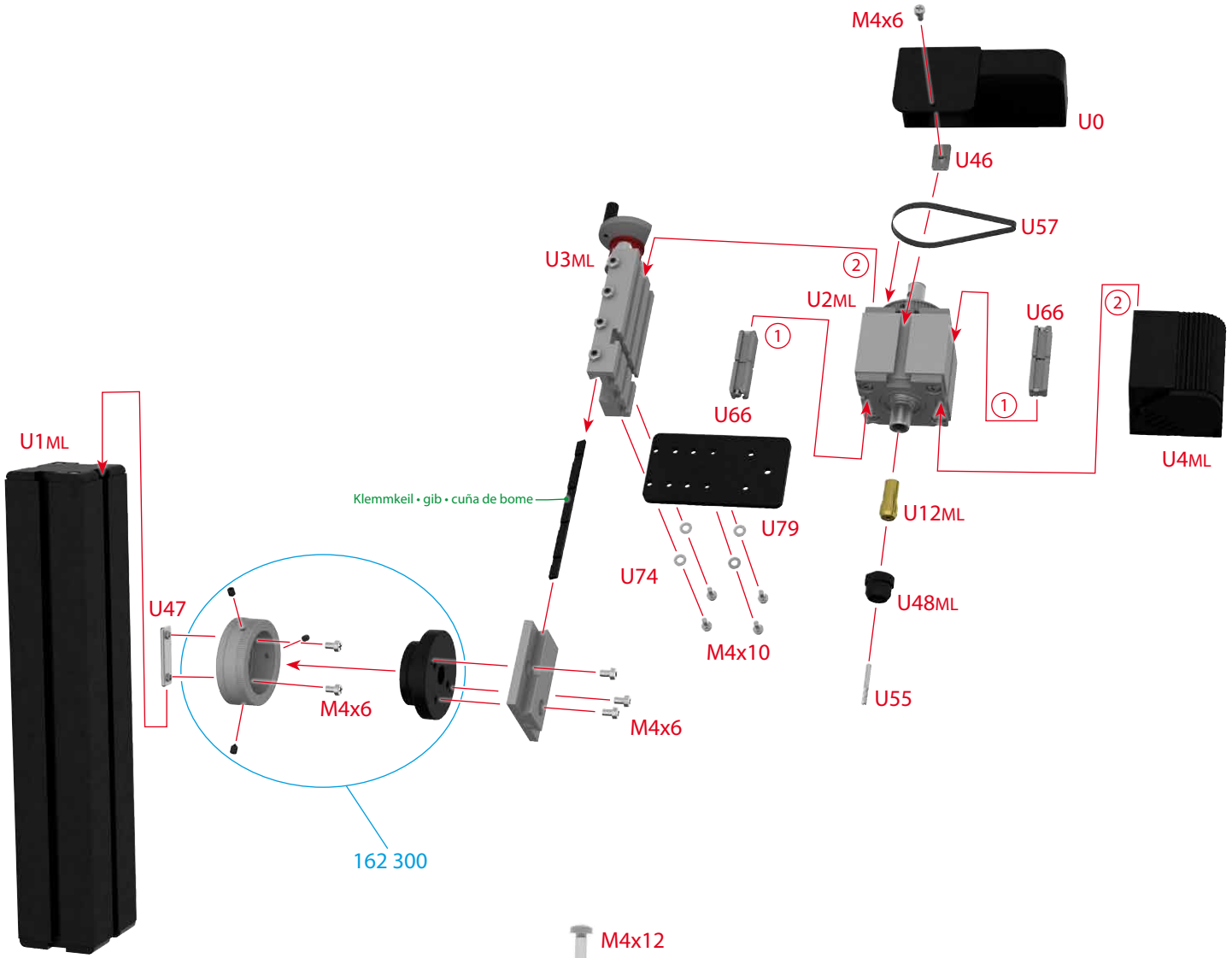
M4x6
U0
U46
U57
U3ML
2
U2ML
U66
2
1
1
U66
U4ML
U1ML
Klemmkeil • gib • cuña de bome
U12ML
U79
U74
U48ML
U47
M4x10
M4x6
U55
M4x6
162 300

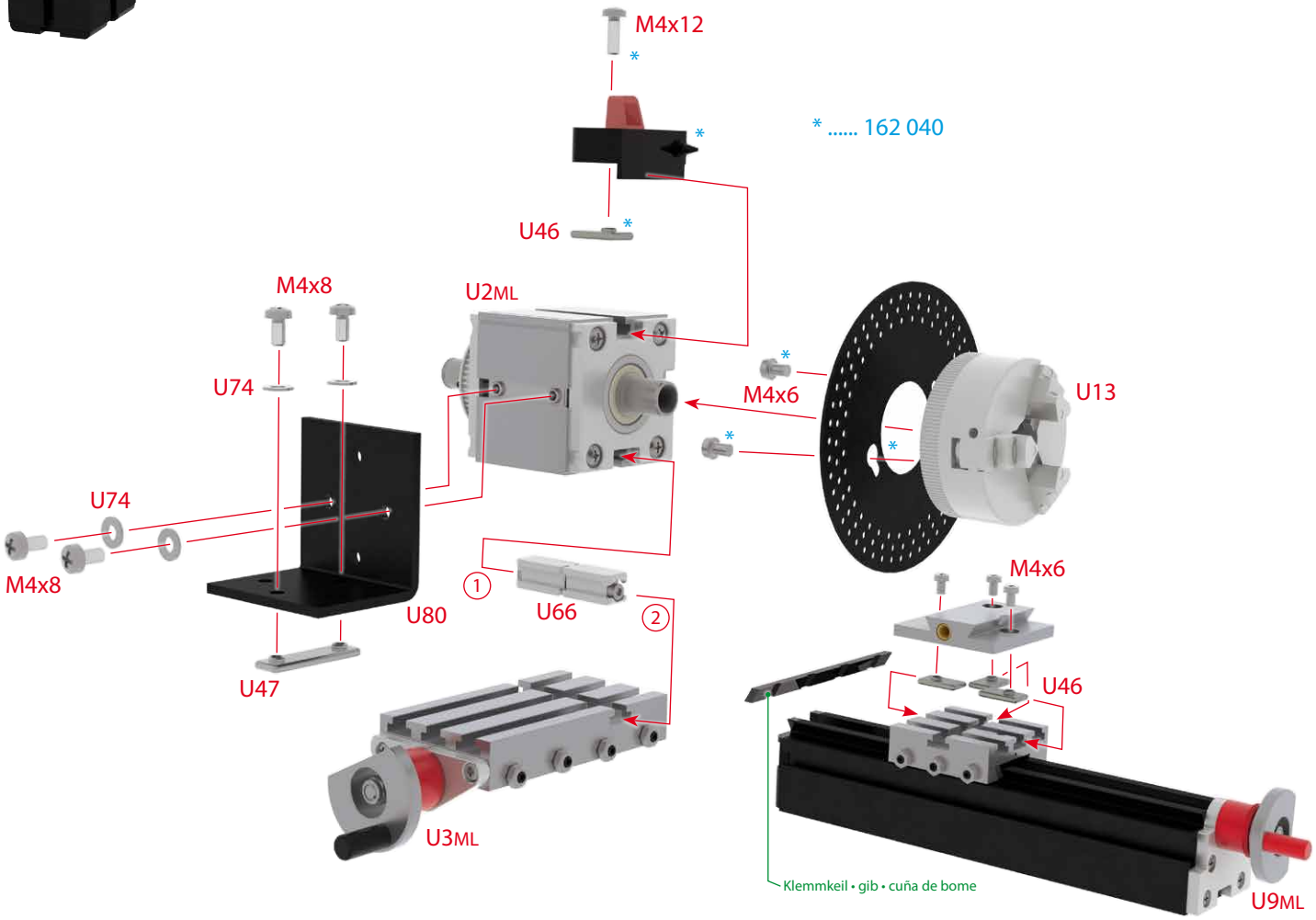
M4x12
*
* 162 040
U46
M4x8
U2ML
U74
M4x6
U13
U74
M4x8
1
U66
2
U80
U47
M4x6
U46
U3ML
Klemmkeil • gib • cuña de bome
U9ML

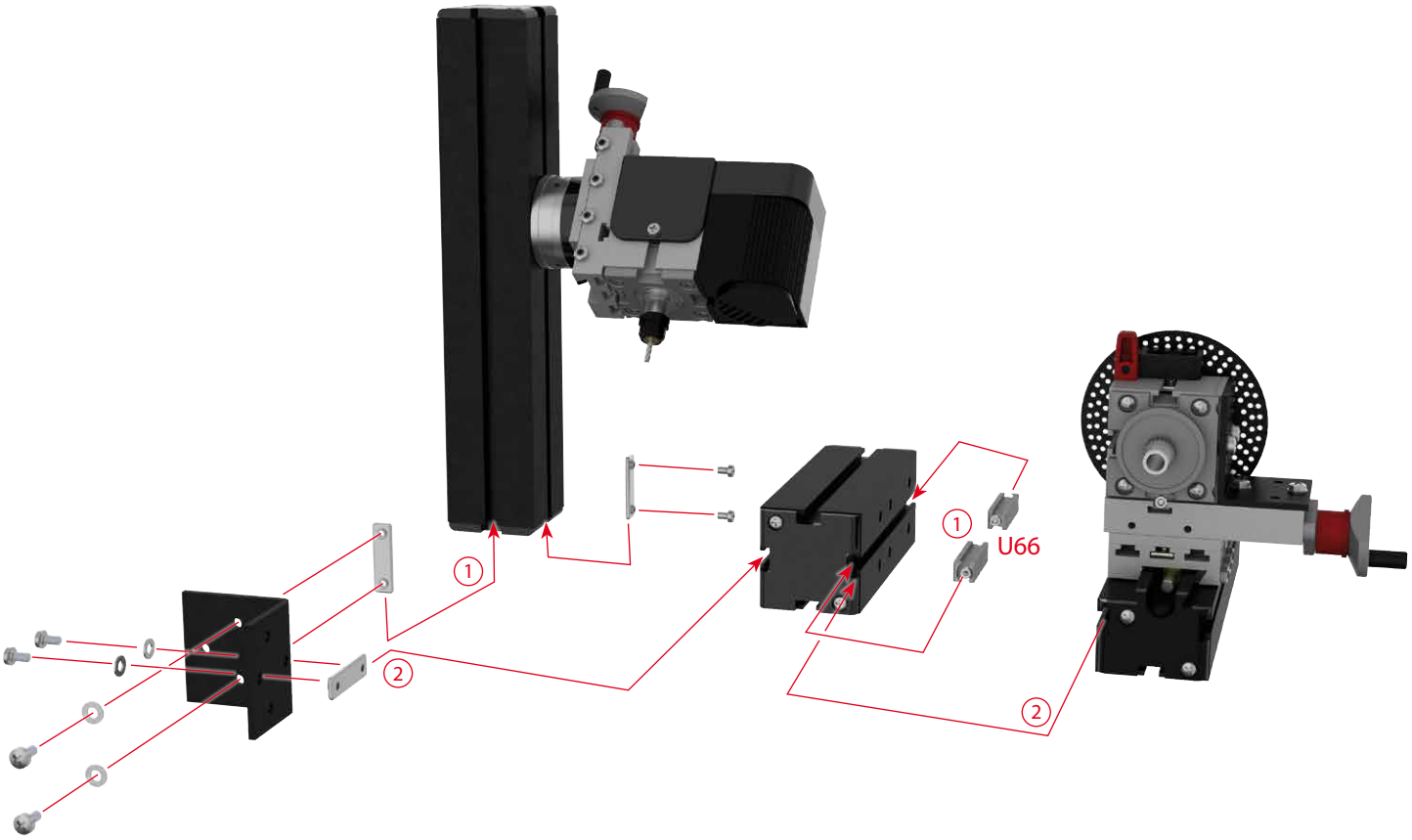

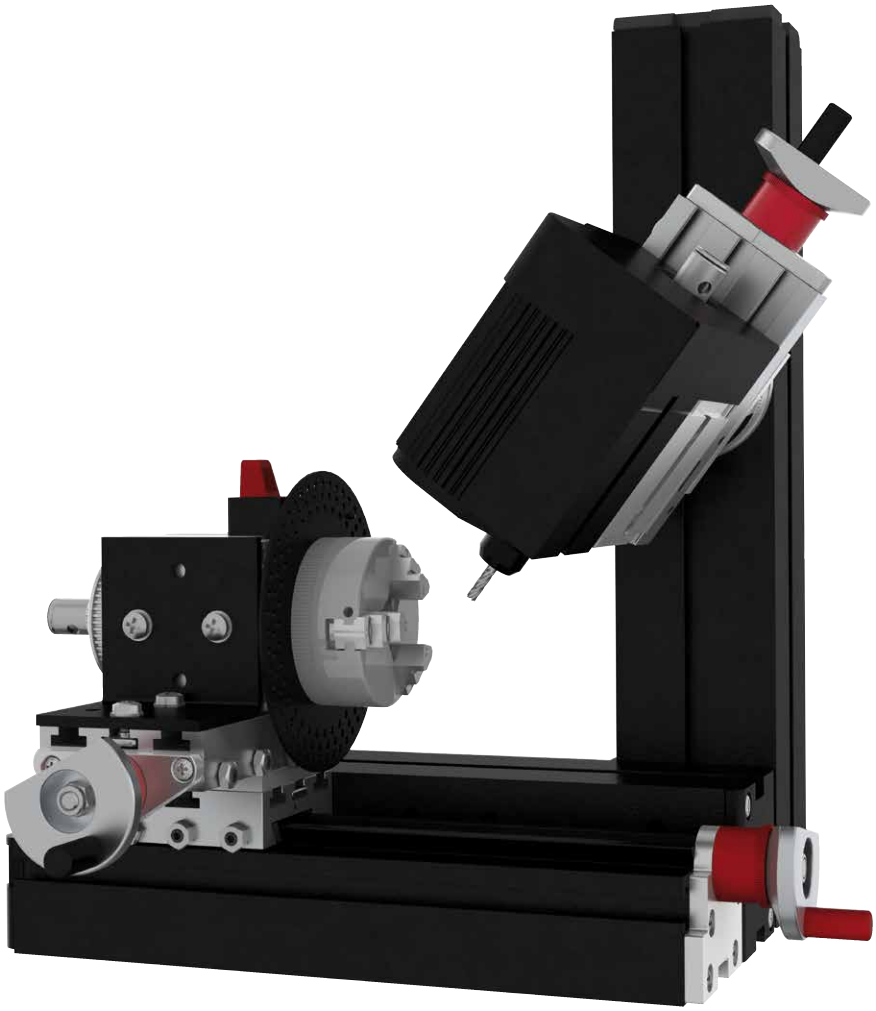

The cool tool® GmbH est. 1982
www.thecooltool.com
Fabriksgasse 15 | 2340 Mödling
Phone +43 2236 892 666 | AUSTRIA
contact us at info@thecooltool.com

Vorbehaltlich Fehler • *Errors excepted*

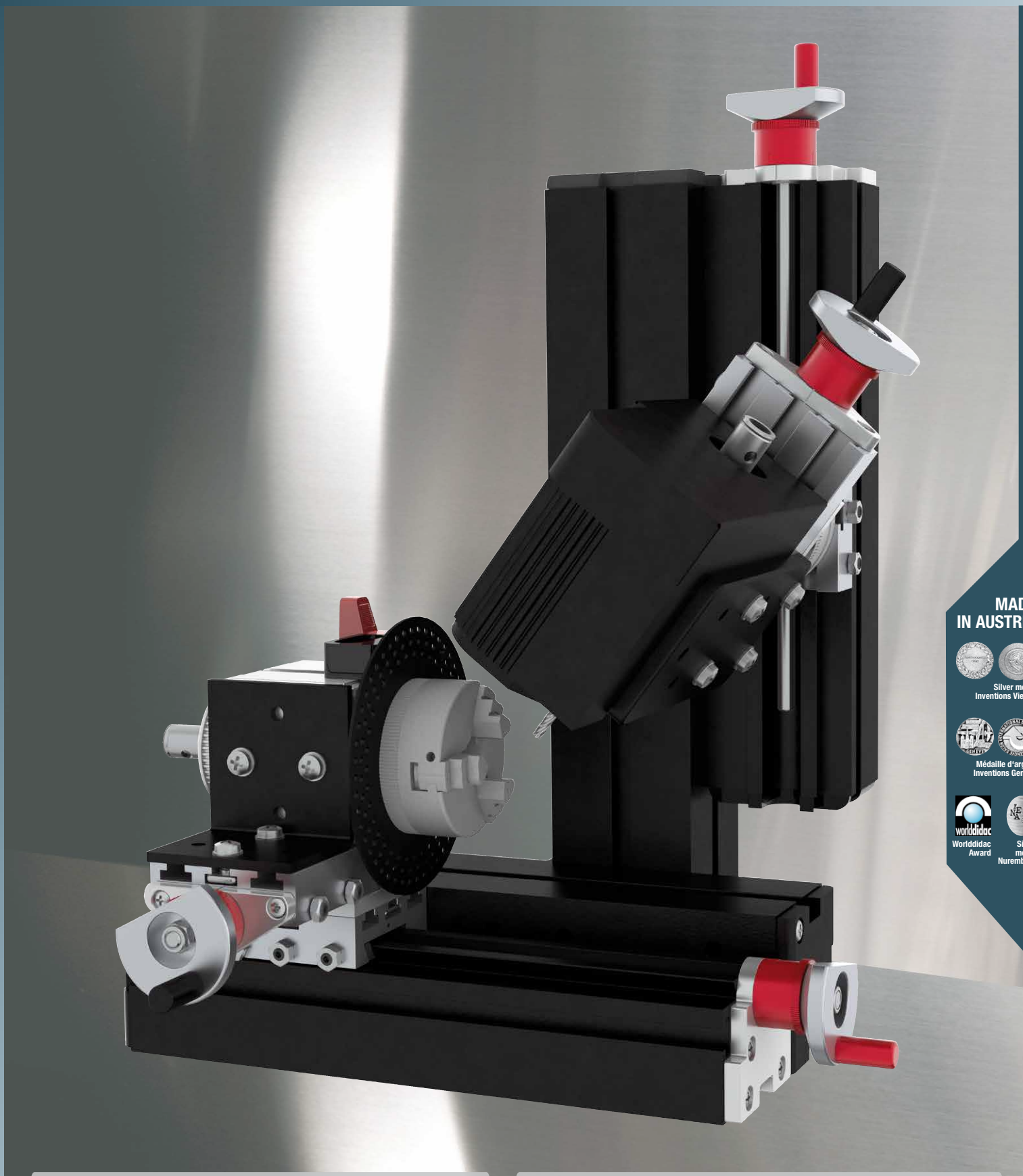

VS_166044-Ref19-11-14

MADE IN AUSTRIA

Silver medal Inventions Vienna

Médaille d'argent Inventions Genève

Worlddidac Award

Silver medal Nuremberg

[6-ACHSENFRÄSE]

[6 AXIS MILLING MACHINE]

[FRAISEUSE DE 6-AXES]

[FRESADORA CON 6-EJES]

The tool 1881 est. 1982 QUALITY PRODUCT MADE IN AUSTRIA

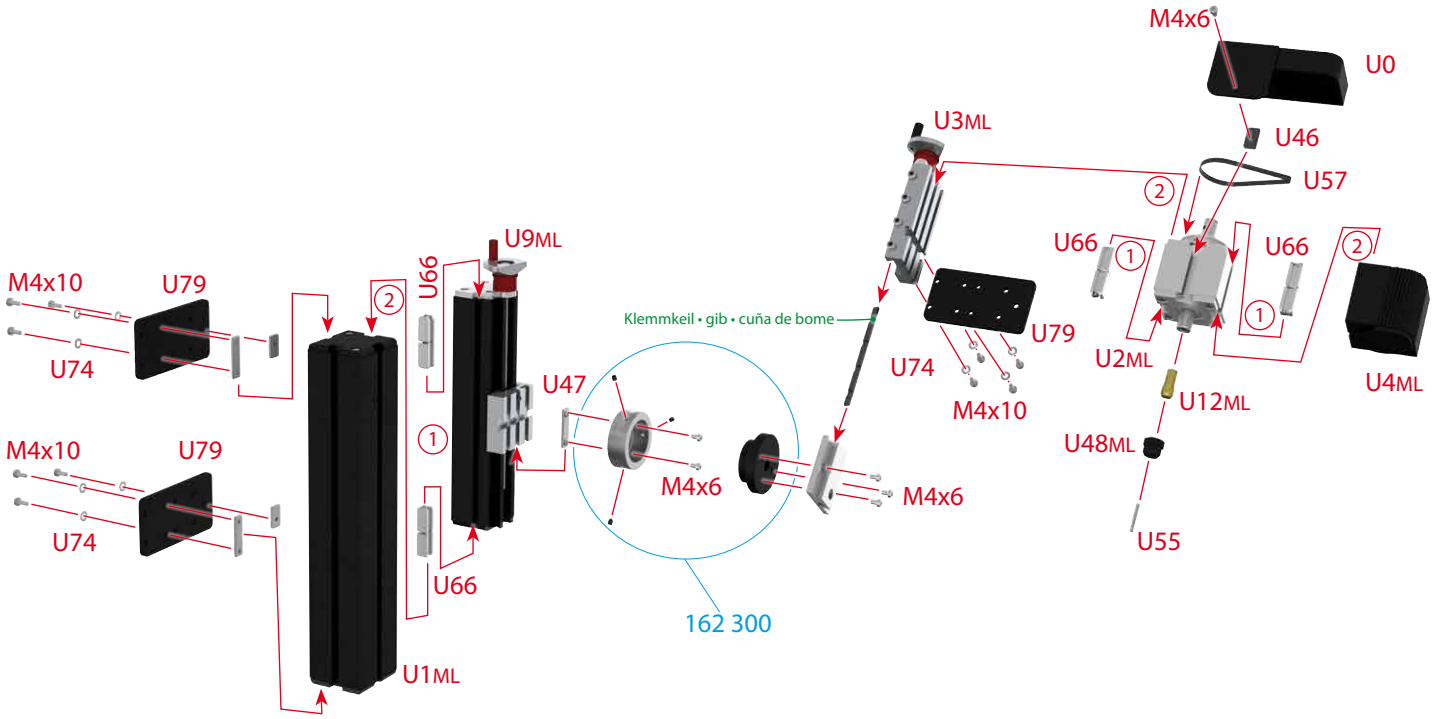
M4x6
U0
U46
U57
U3ML
U66
U66
U9ML
M4x10
U79
U74
U66
Klemmkeil • gib • cuña de bome
U47
U79
U74
U2ML
U4ML
M4x10
U12ML
M4x10
U79
U48ML
M4x6
M4x6
U74
U55
U66
162 300
U1ML

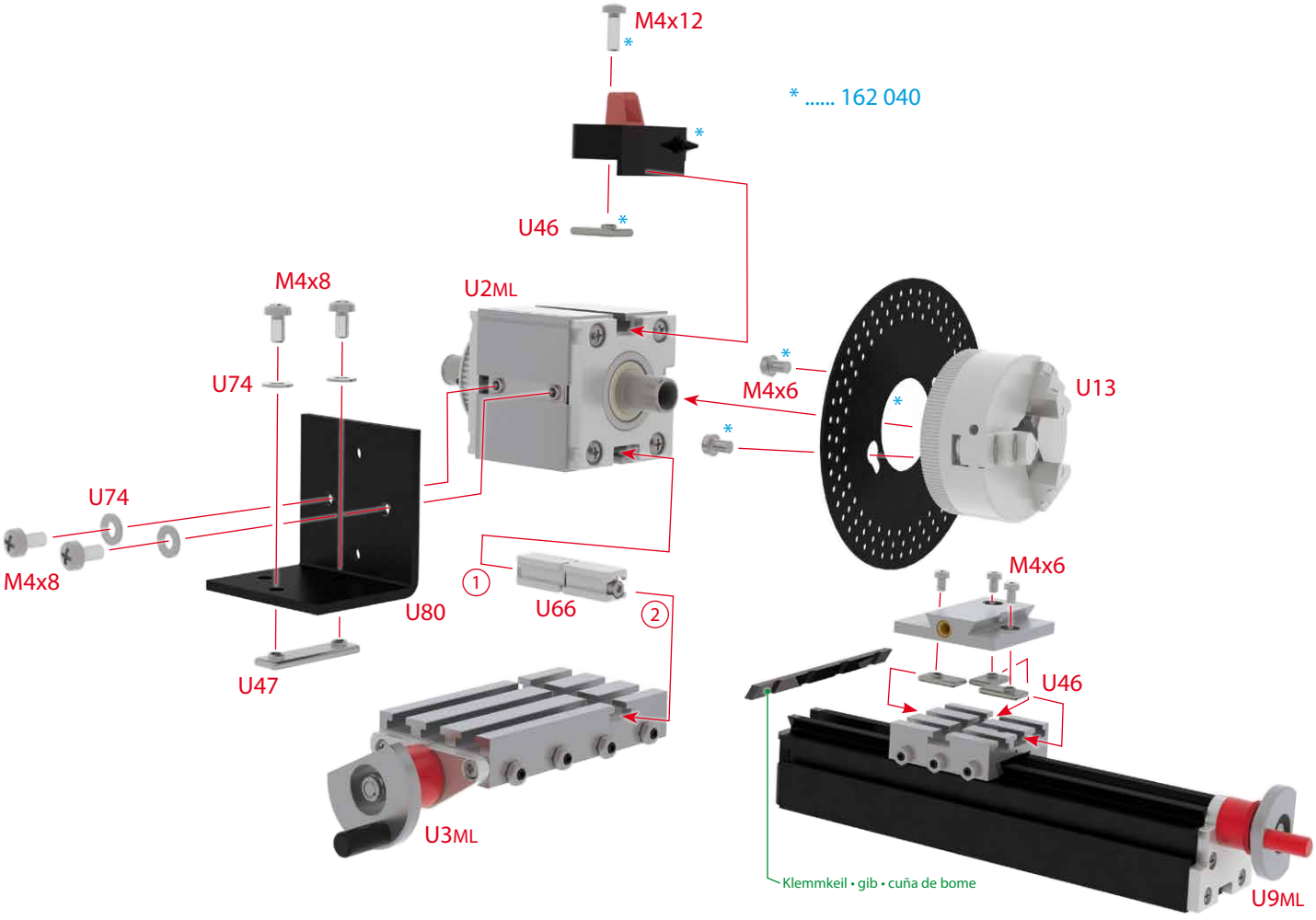
M4x12
* 162 040
U46
M4x8
U2ML
U74
M4x6
U13
U74
M4x8
U80
U66
M4x6
U47
U46
U3ML
Klemmkeil • gib • cuña de bome
U9ML

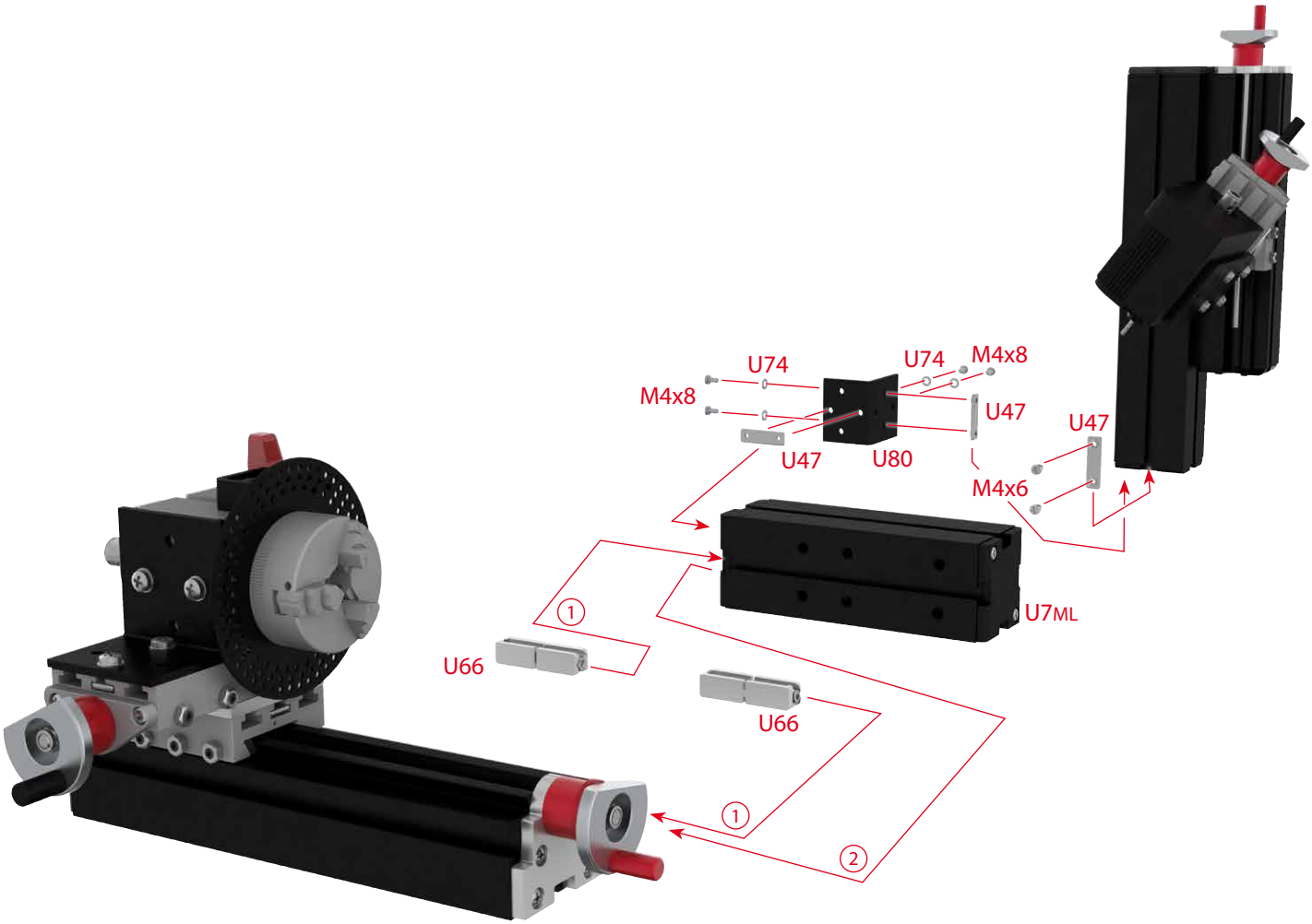

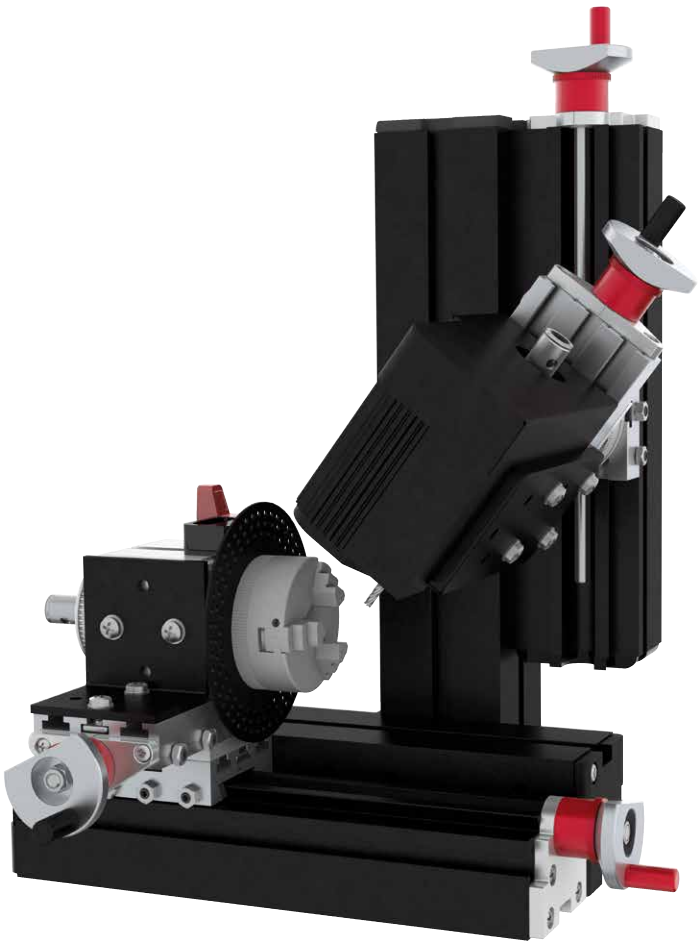

The cool tool® GmbH est. 1982
www.thecooltool.com
Fabriksgasse 15 | 2340 Mödling
Phone +43 2236 892 666 | AUSTRIA
contact us at info@thecooltool.com

Vorbehaltlich Fehler • *Errors excepted*

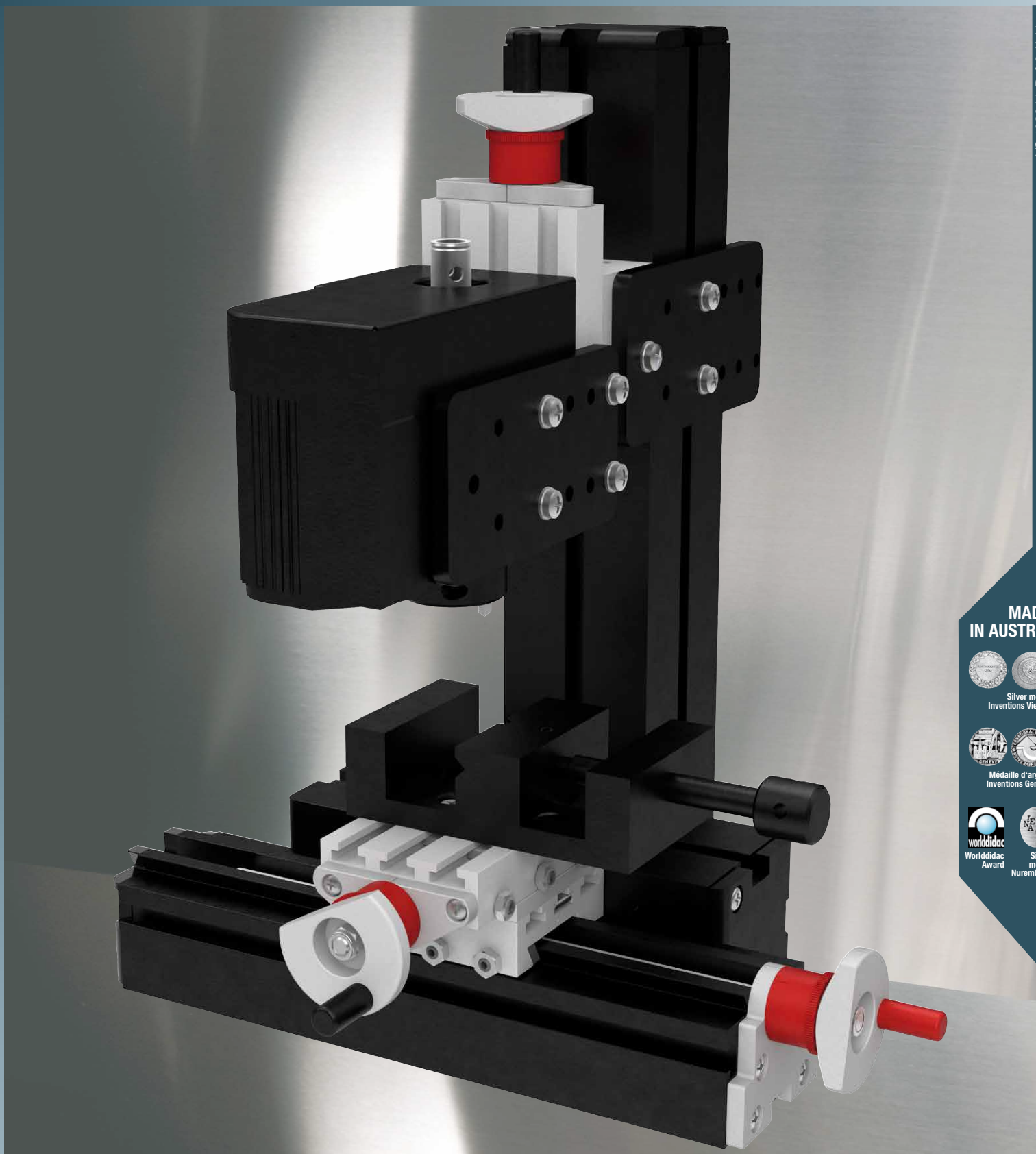

VS_166044-Ref19-11-14

MADE IN AUSTRIA

Silver medal Inventions Vienna

Médaille d'argent Inventions Genève

Worlddidac Award

Silver medal Nuremberg

[PLANFRÄSE]

[FLY CUTTING MACHINE]

[FRAISEUSE CON TÊTE D´ALÉSAGE]

[FRESADORA APLANADO]

The tool® est. 1982 QUALITY PRODUCT MADE IN AUSTRIA

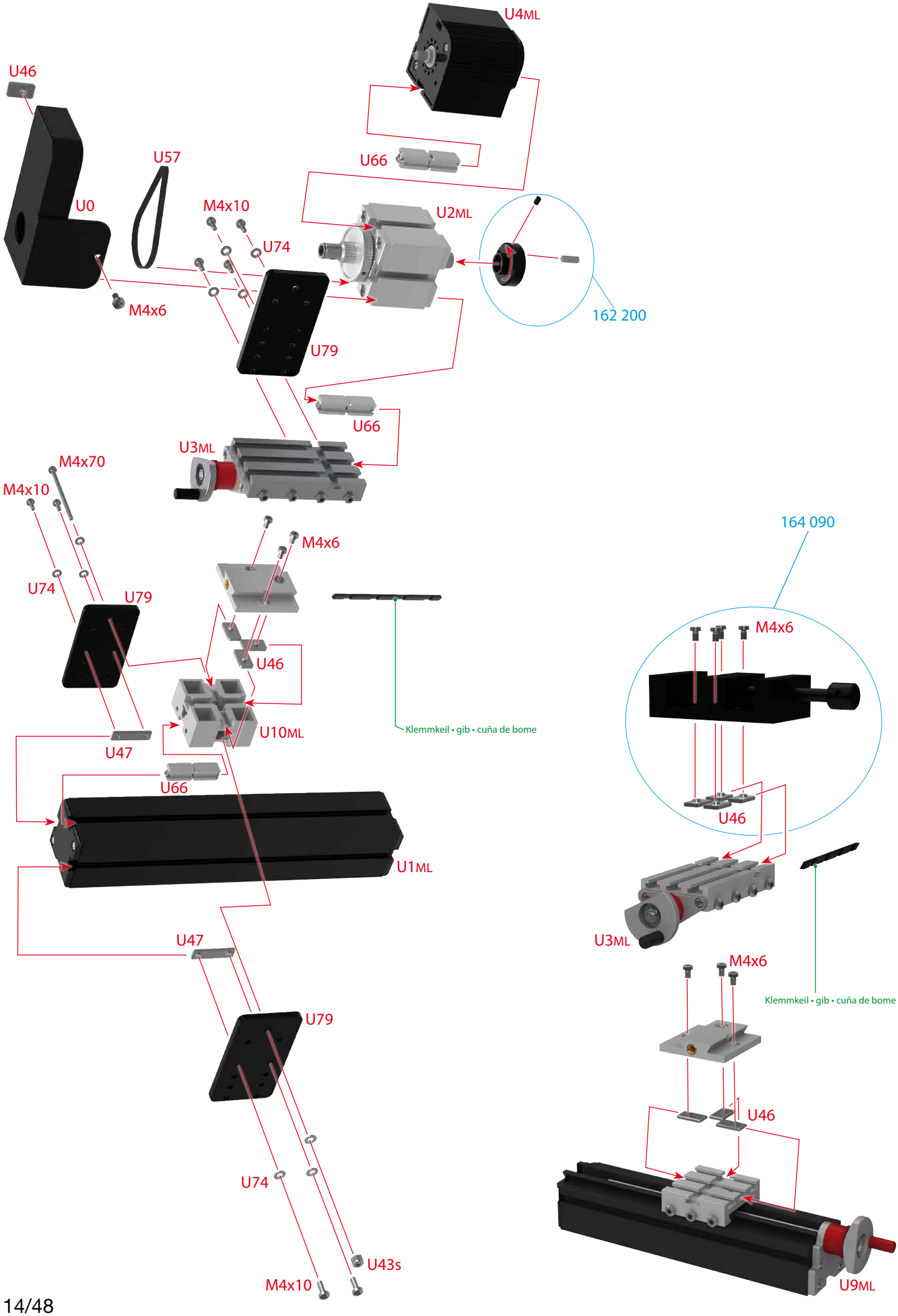
U4ML
U46
U57
U66
U0
M4x10
U2ML
U74
M4x6
162 200
U79
U66
U3ML
M4x70
M4x10
164 090
M4x6
U74
U79
M4x6
U46
Klemmkeil • gib • cuña de bome
U10ML
U47
U66
U46
U1ML
U3ML
U47
M4x6
Klemmkeil • gib • cuña de bome
U79
U46
U74
U43s
M4x10
U9ML

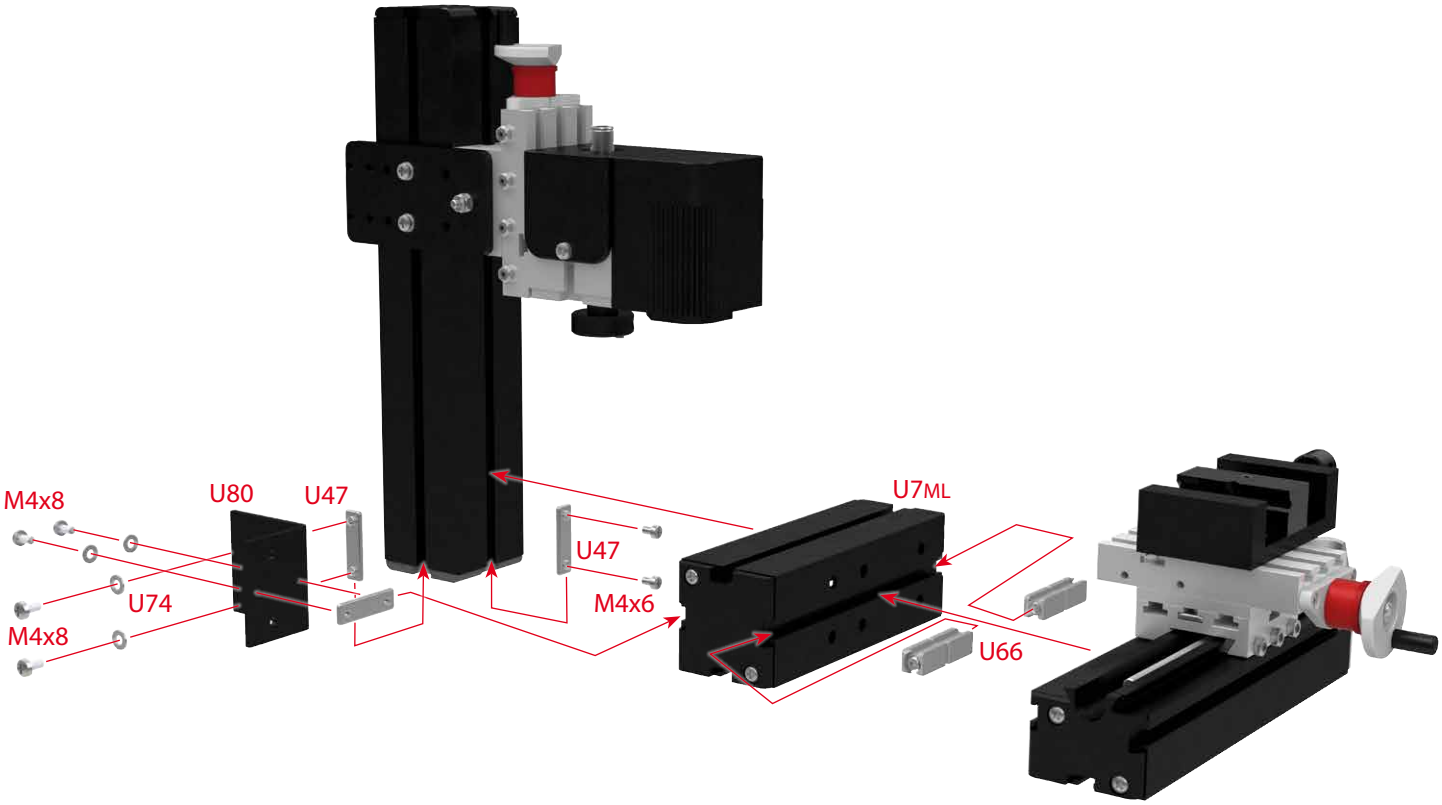

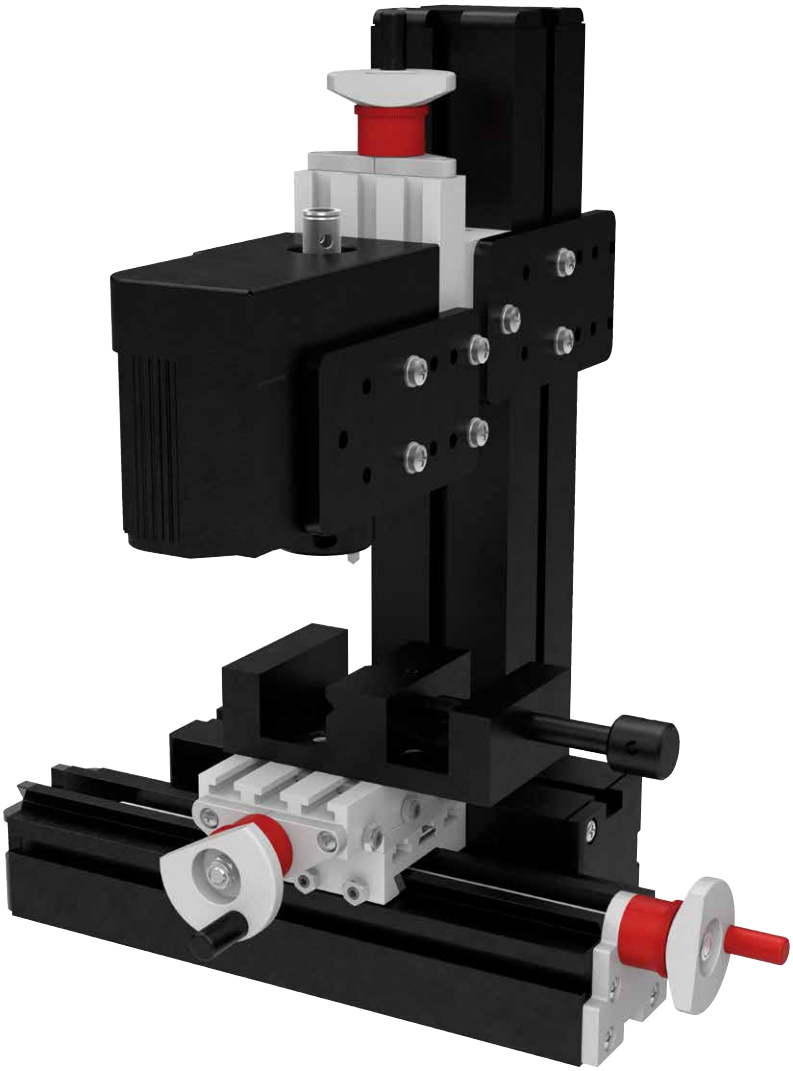

www.thecooltool.com
Fabriksgasse 15 | 2340 Mödling
Phone +43 2236 892 666 | AUSTRIA
contact us at info@thecooltool.com

Vorbehaltlich Fehler • *Errors excepted*

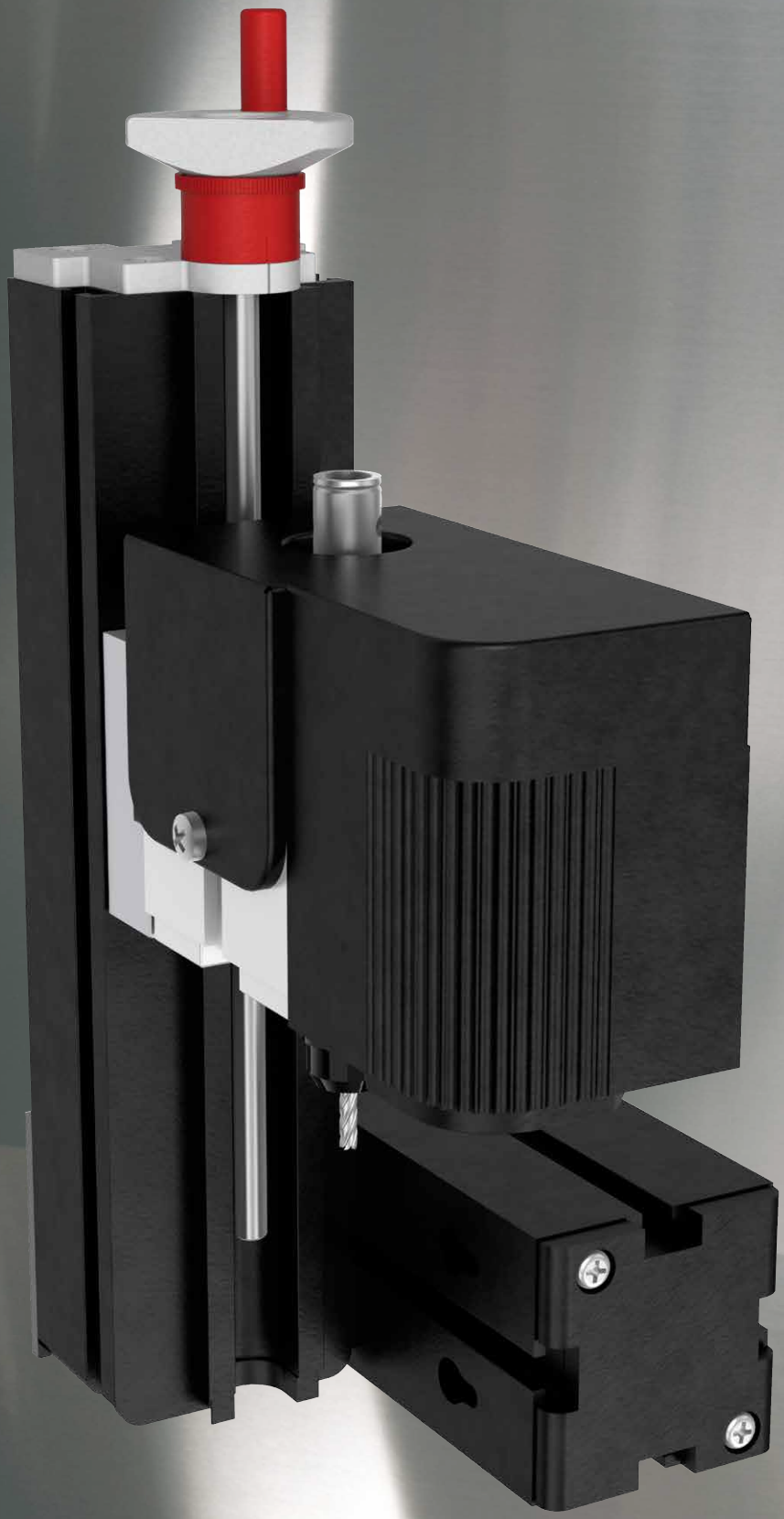

VS_166044-Ref19-11-14

MADE IN AUSTRIA

Silver medal Inventions Vienna

Médaille d'argent Inventions Genève

Worlddidac Award

Silver medal Nuremberg

[HANDFRÄSMASCHINE]

[HAND-HELD MILLING MACHINE]

[DÉFONCEUSE]

[FRESADORA]

The tool 1981 est. 1982 QUALITY PRODUCT MADE IN AUSTRIA

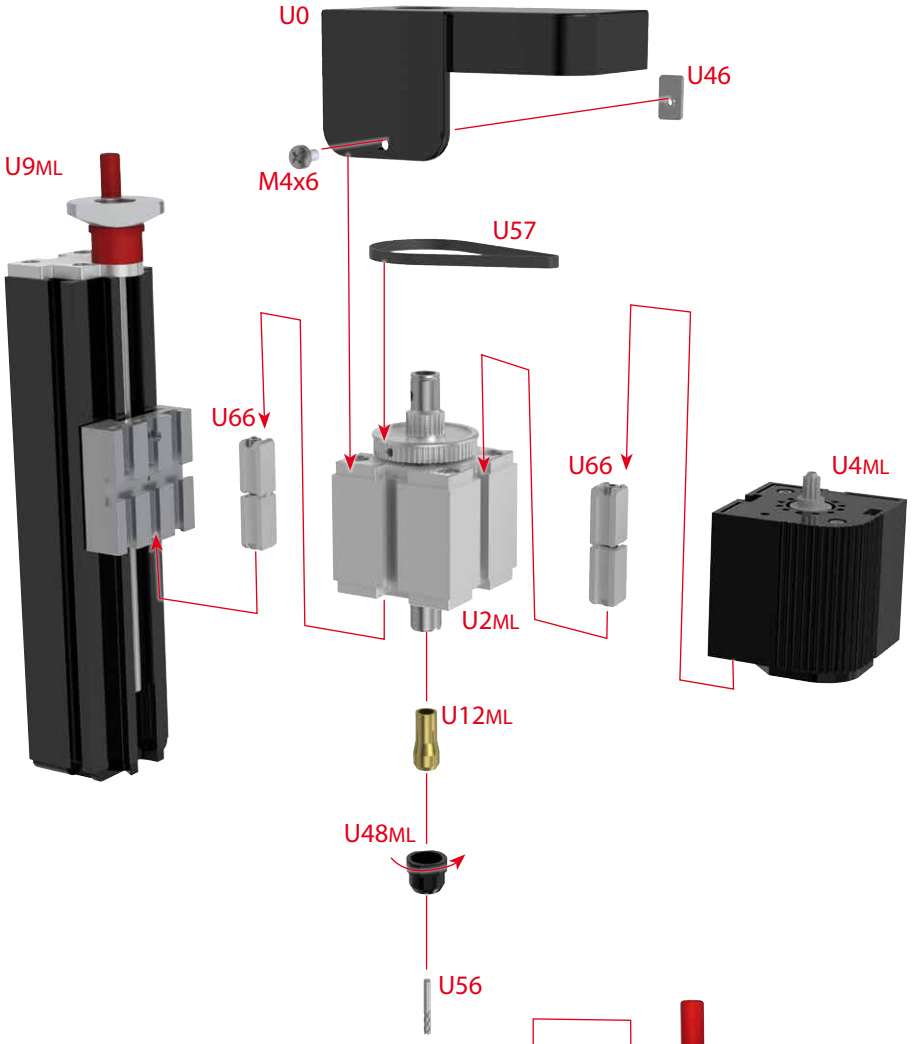

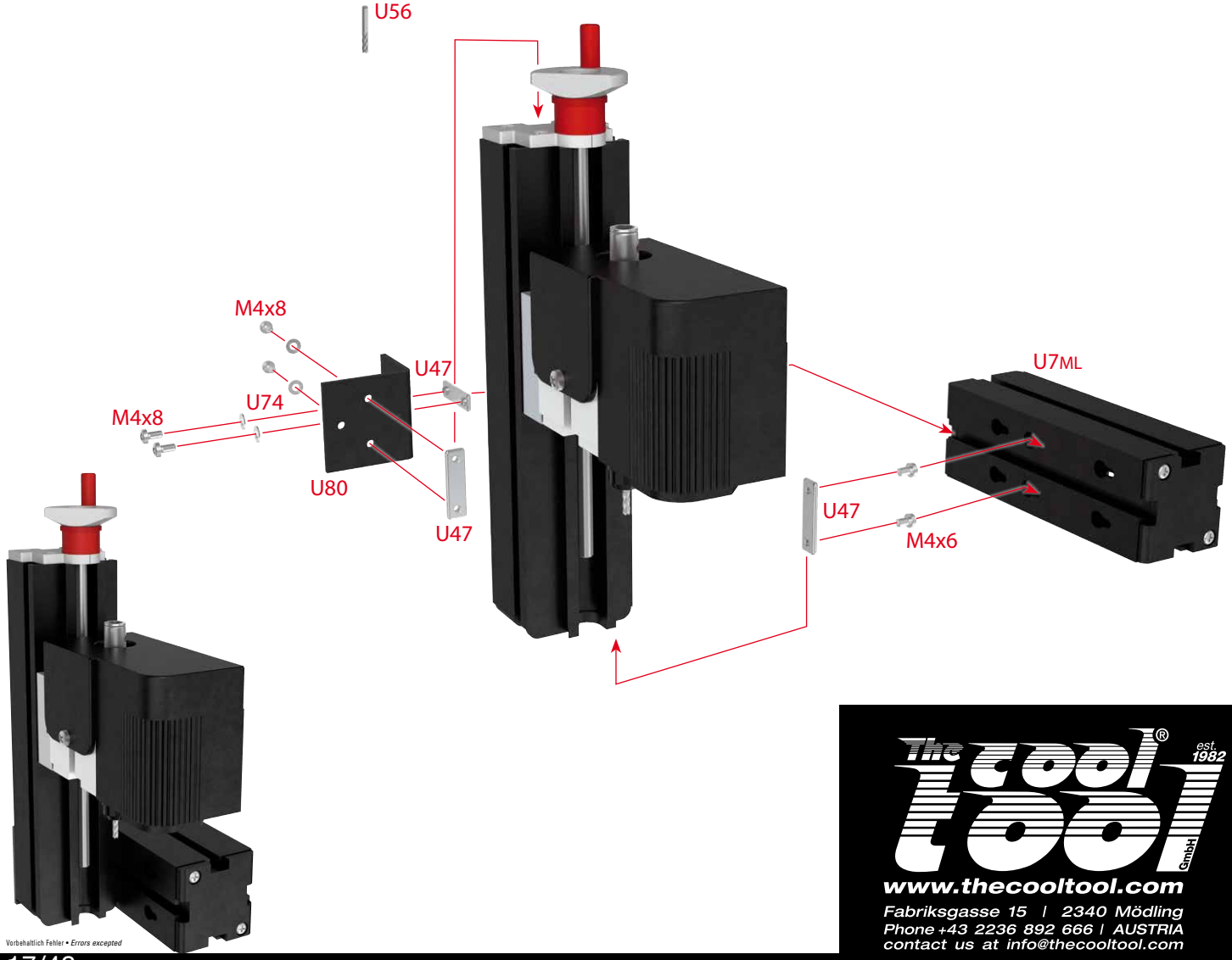

Vorbehaltlich Fehler • *Errors excepted*

The cool tool® GmbH est. 1982
www.thecooltool.com
Fabriksgasse 15 | 2340 Mödling
Phone +43 2236 892 666 | AUSTRIA
contact us at info@thecooltool.com

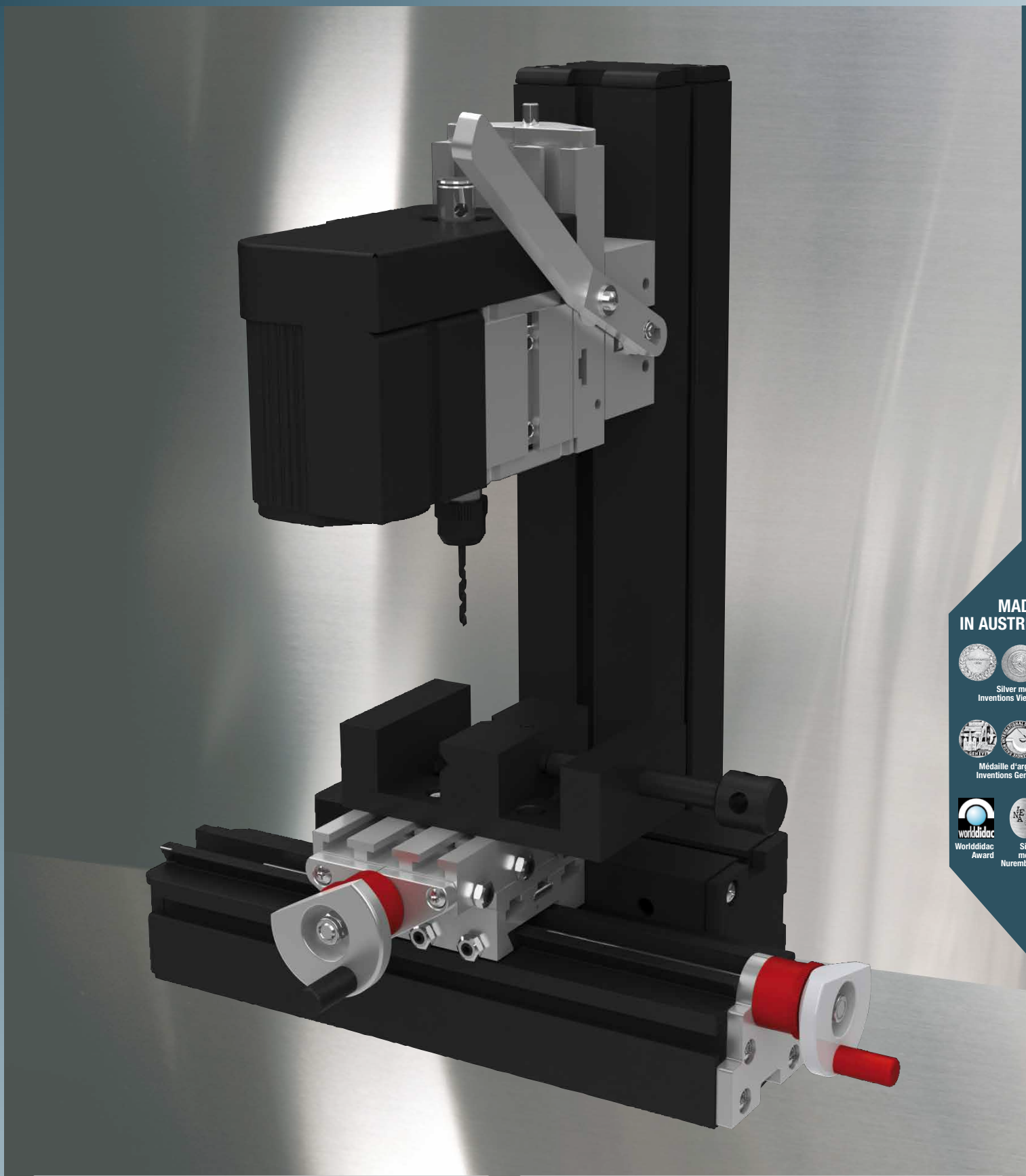

VS_166044-Ref23-08-18

MADE IN AUSTRIA

Silver medal Inventions Vienna

Médaille d'argent Inventions Genève

Worlddidac Award

Silver medal Nuremberg

[STANDBOHRMASCHINE]

[DRILLPRESS]

[PERCEUSE VERTICALE]

[TALADRADORA VERTICAL]

The tool 1981 est. 1982 QUALITY PRODUCT MADE IN AUSTRIA

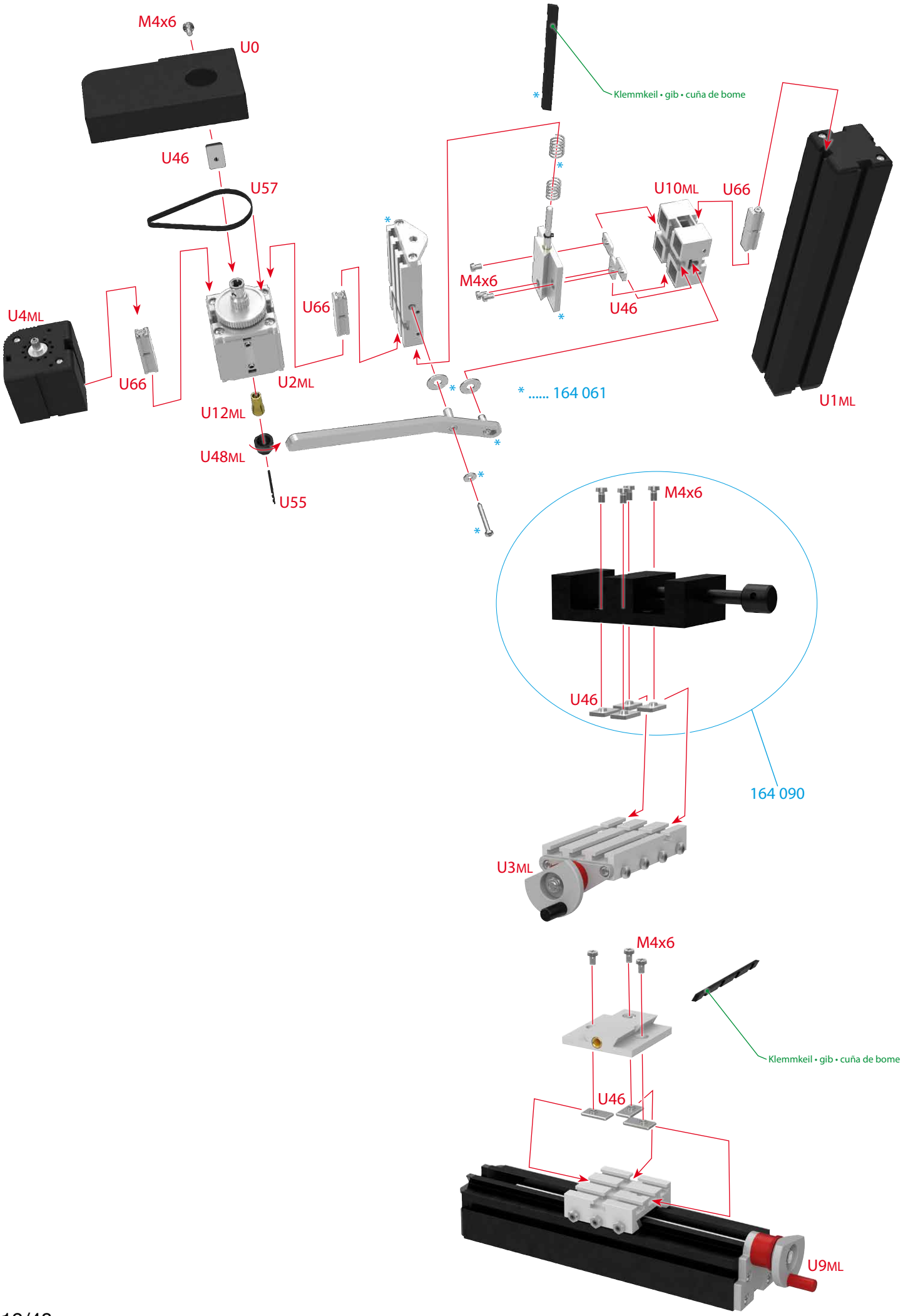
M4x6
U0
U46
U57
U4ML
U66
U2ML
U12ML
U48ML
U55
U66
Klemmkeil • gib • cuña de bome
M4x6
U46
U10ML
U66
U1ML
* 164 061
M4x6
U46
164 090
U3ML
M4x6
Klemmkeil • gib • cuña de bome
U46
U9ML

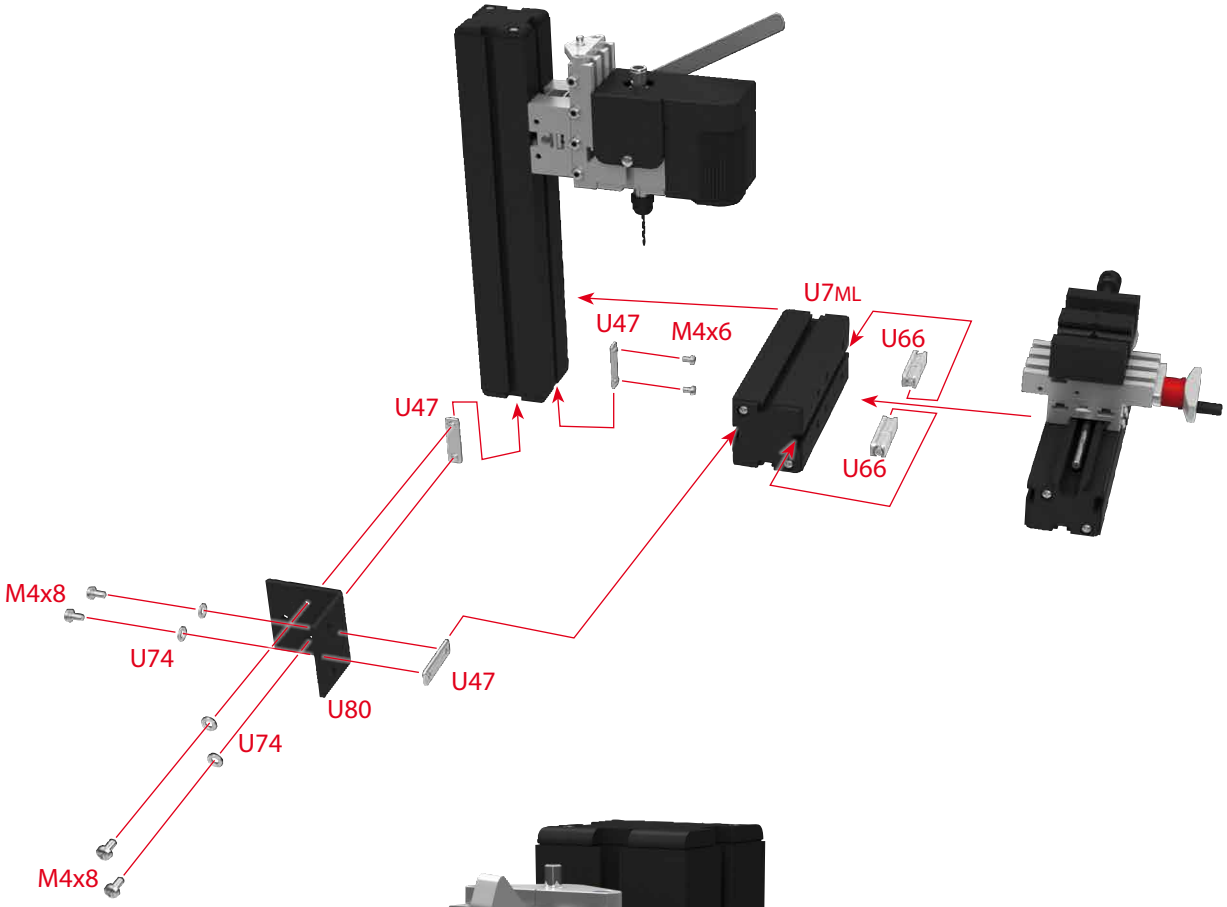

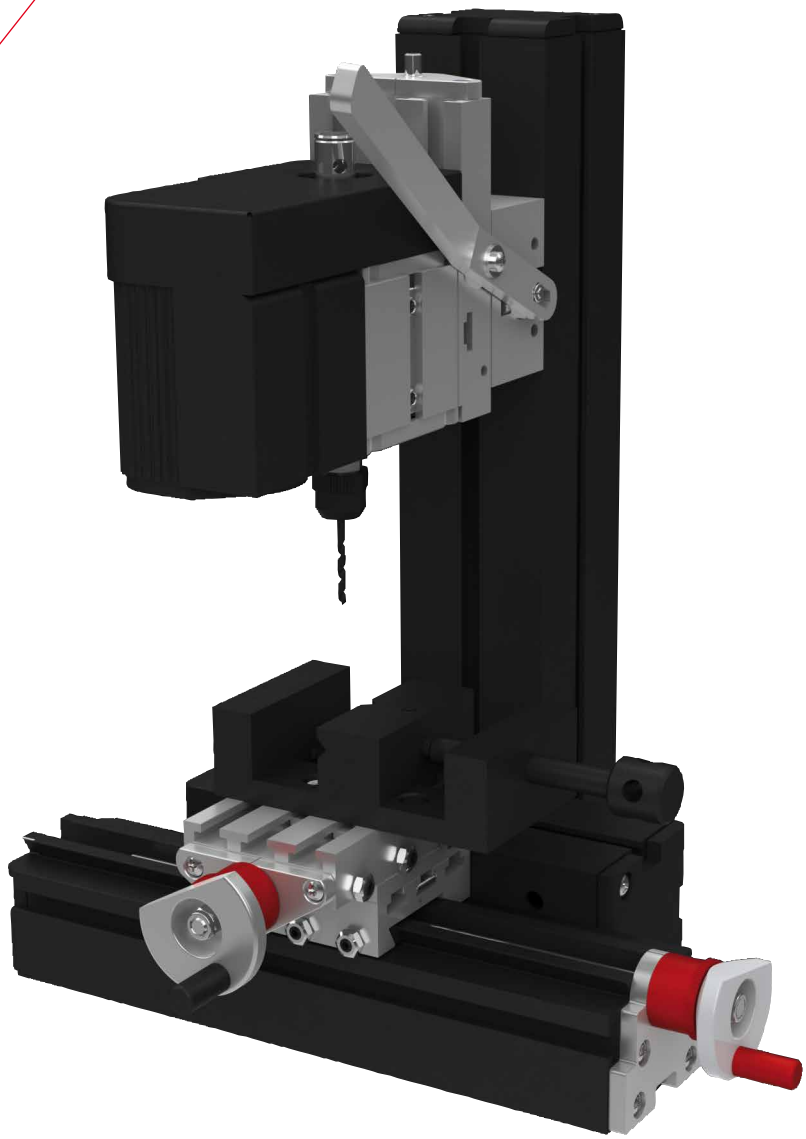

www.thecooltool.com
Fabriksgasse 15 | 2340 Mödling
Phone +43 2236 892 666 | AUSTRIA
contact us at info@thecooltool.com

Vorbehaltlich Fehler • *Errors excepted*

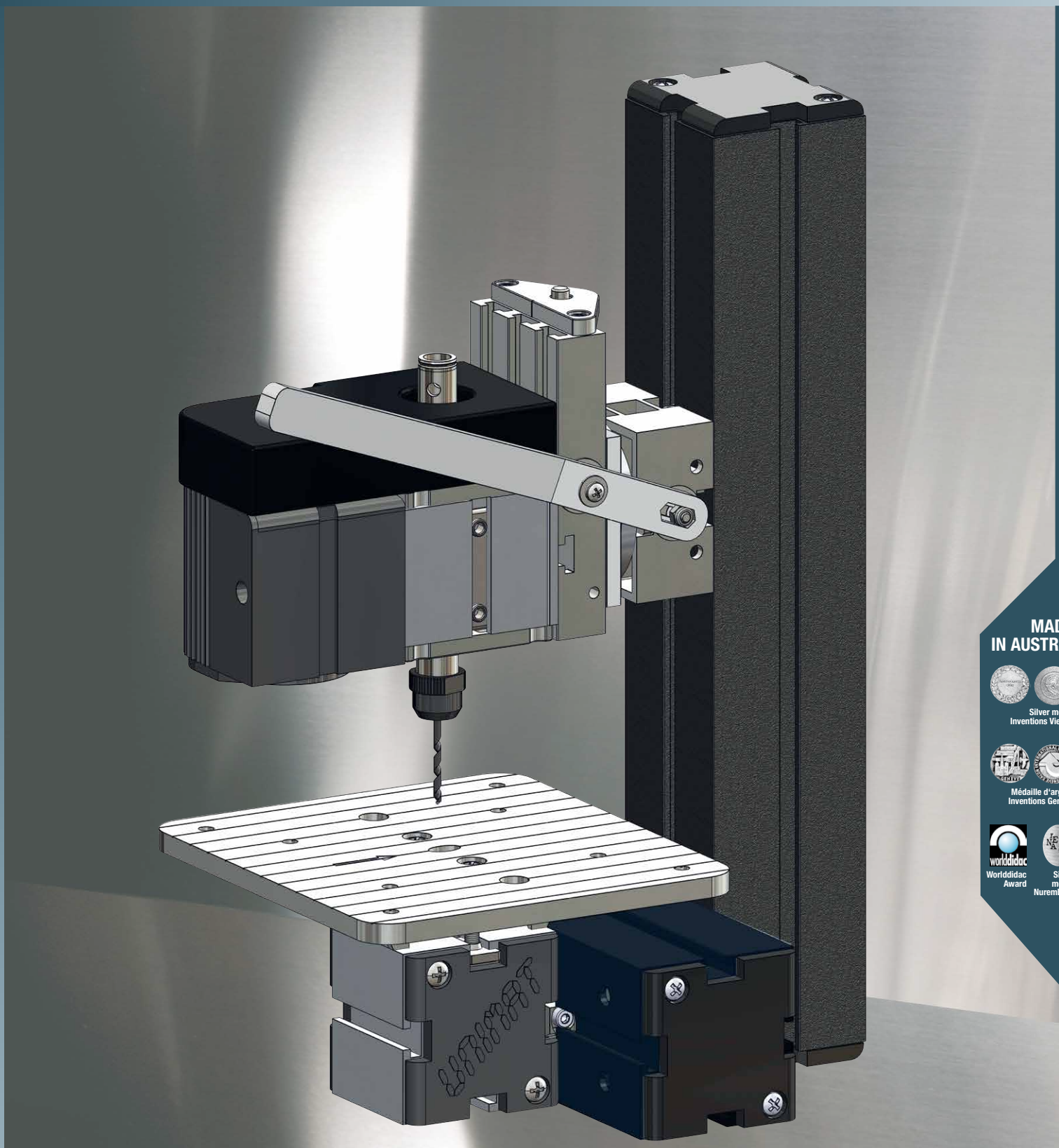

MADE IN AUSTRIA

Silver medal Inventions Vienna

Médaille d'argent Inventions Genève

Worlddidac Award

Silver medal Nuremberg

[STANDBOHRMASCHINE ML]

[DRILL PRESS METAL LINE]

[PERCEUSE VERTICALE ML]

[MÁQUINA TALADRADORA ML]

The tool est. 1982 QUALITY PRODUCT MADE IN AUSTRIA

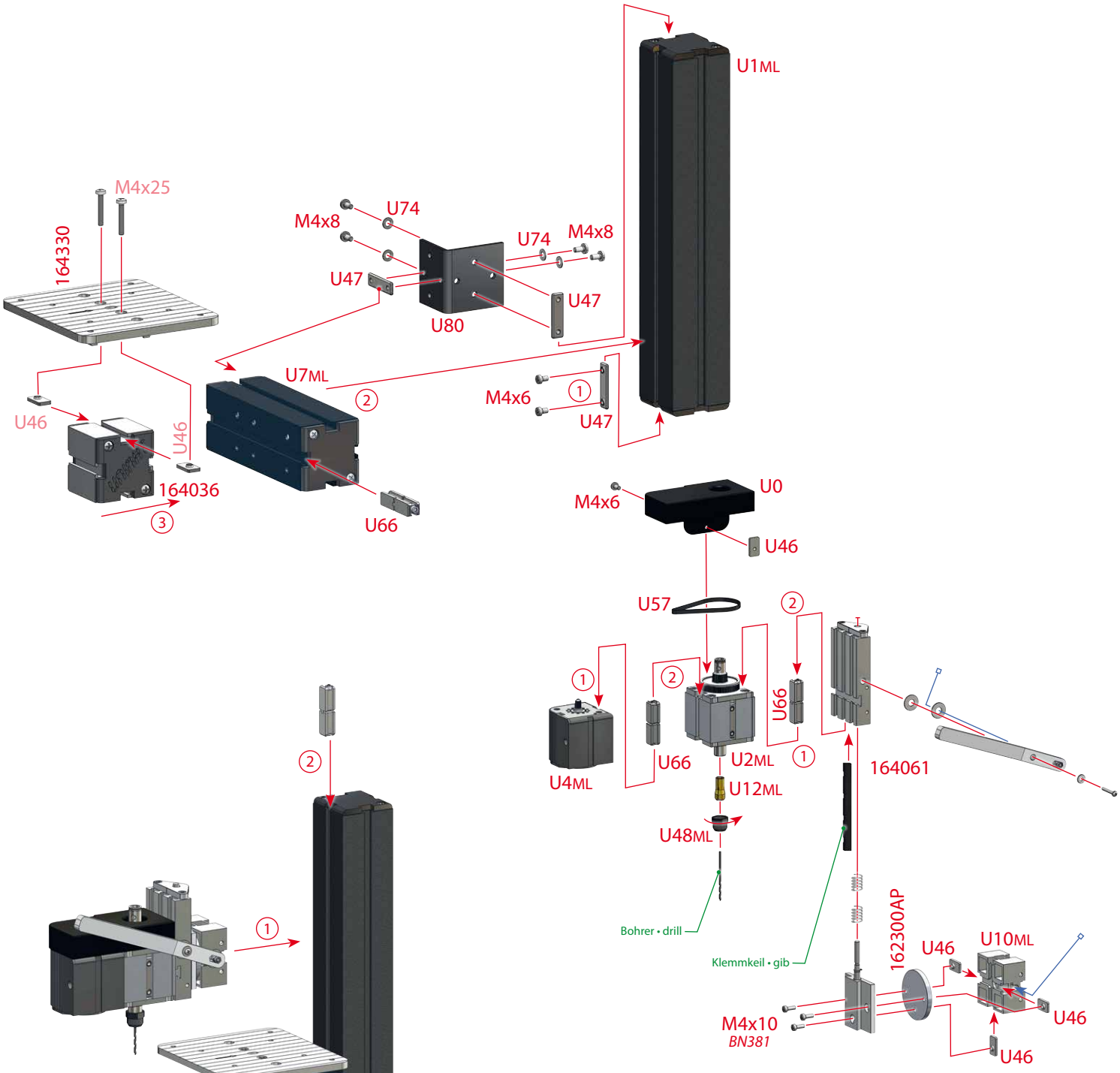

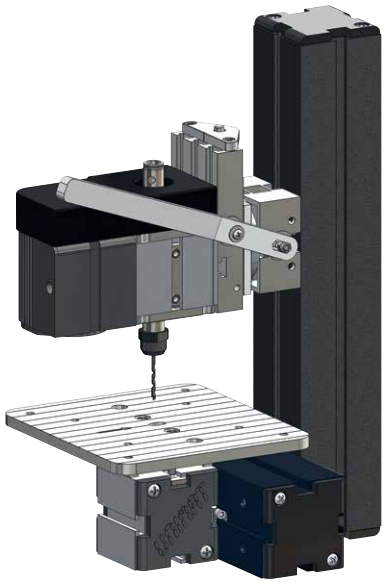

Vorbehaltlich Fehler • *Errors excepted*

www.thecooltool.com
Fabriksgasse 15 | 2340 Mödling
Phone +43 2236 892 666 | AUSTRIA
contact us at info@thecooltool.com

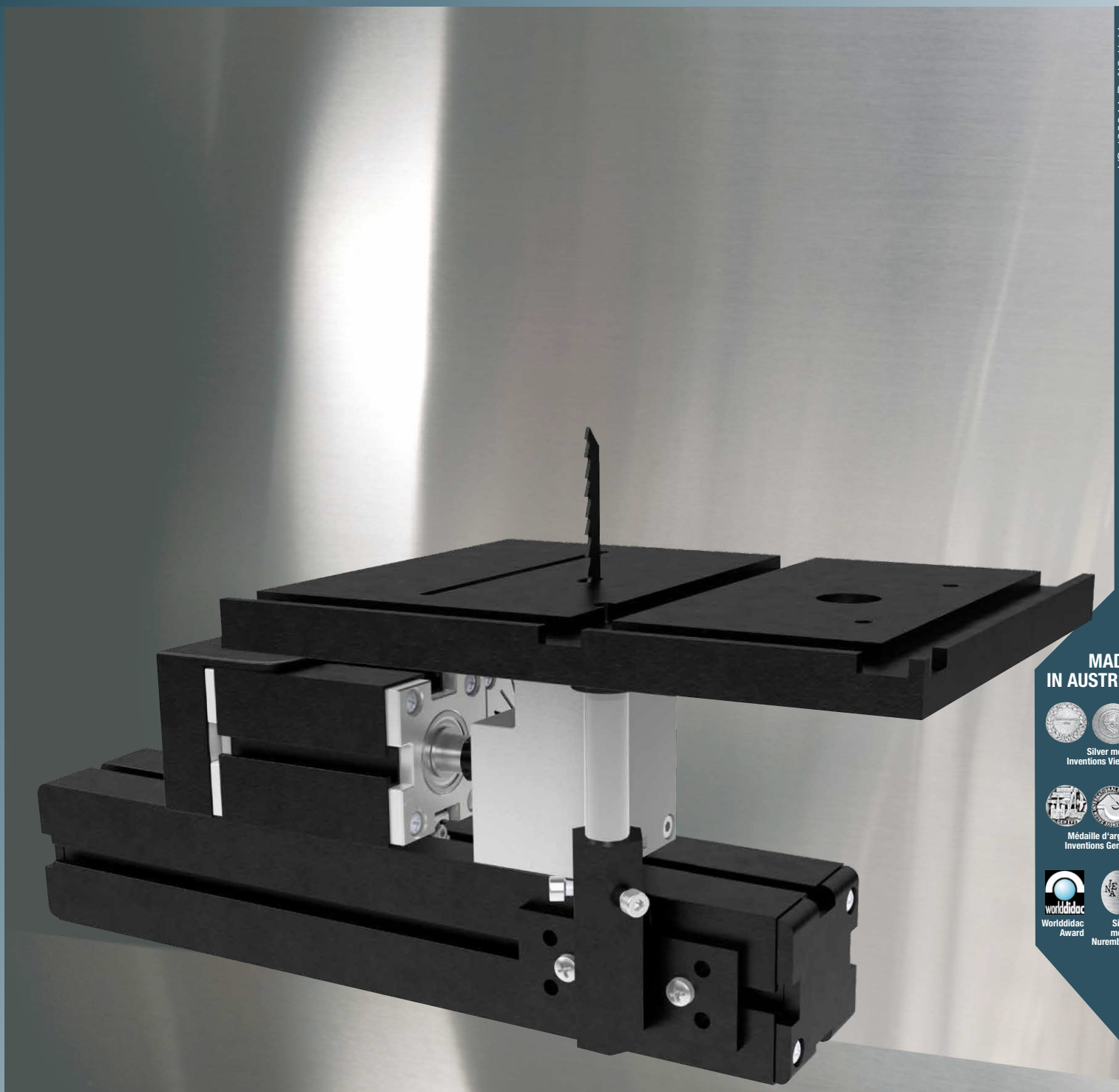

VS_166044-Ref19-11-14

MADE IN AUSTRIA

Silver medal Inventions Vienna

Médaille d'argent Inventions Genève

Worlddidac Award

Silver medal Nuremberg

[STICHSÄGE ML/PL]

[JIG SAW ML/PL]

[SCIE SAUTEUSE]

[SIERRA DA CALAR]

The tool 1981 est. 1982 QUALITY PRODUCT MADE IN AUSTRIA

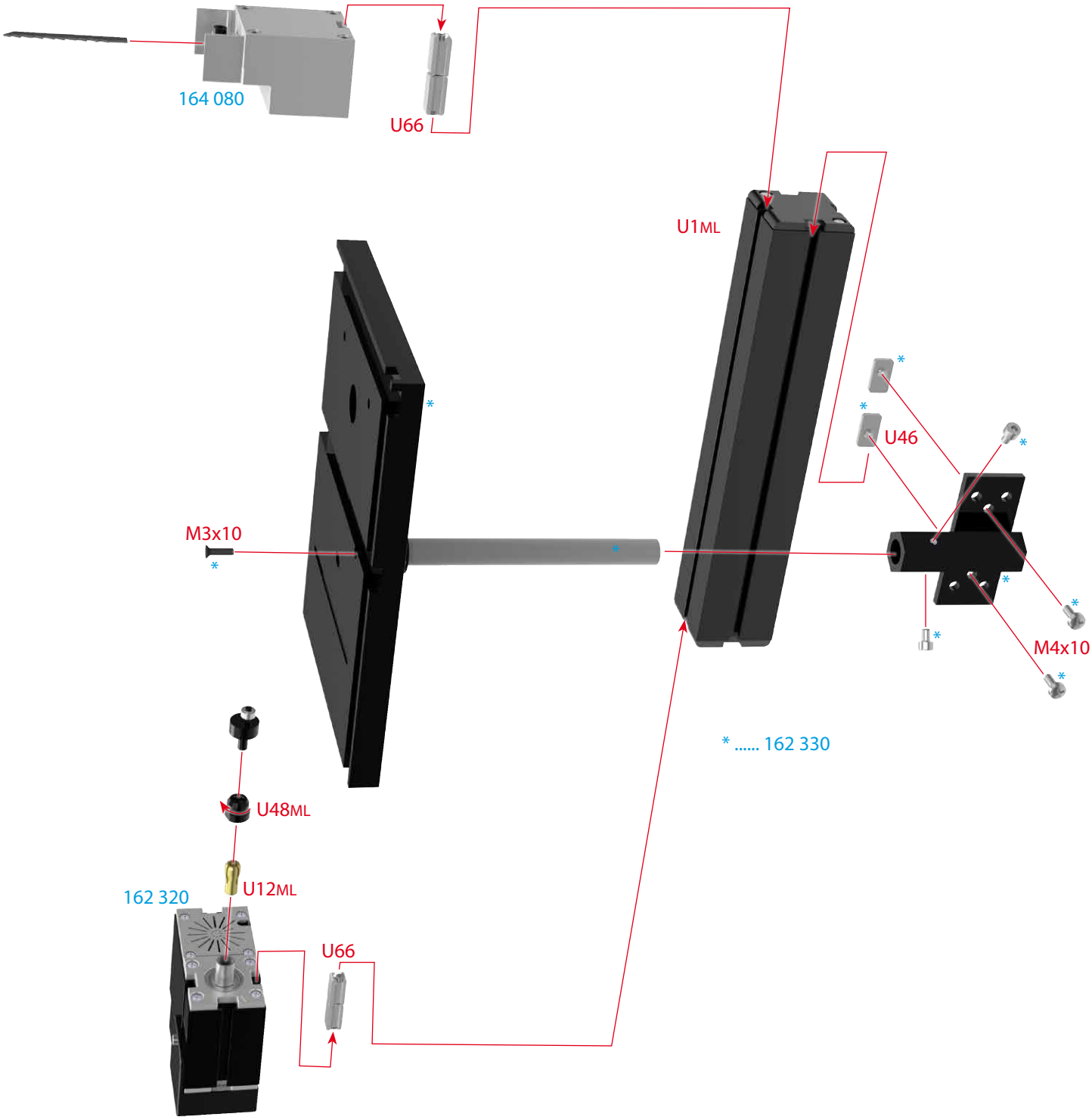

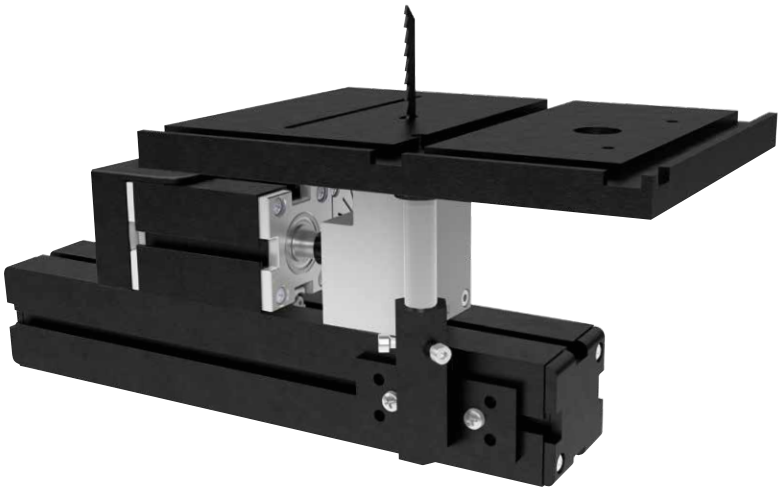

Vorbehaltlich Fehler • *Errors excepted*

The cool tool® GmbH est. 1982
www.thecooltool.com
Fabriksgasse 15 | 2340 Mödling
Phone +43 2236 892 666 | AUSTRIA
contact us at info@thecooltool.com

VS_166044-Ref19-11-14

MADE IN AUSTRIA

Silver medal Inventions Vienna

Médaille d'argent Inventions Genève

Worlddidac Award

Silver medal Nuremberg

[TISCHFRÄSE- UND PROFILFRÄSE]

[TABLE MILL]

[FRAISE À PROFILER]

[FRESADORA DE PERFILES]

The tool company est. 1982 QUALITY PRODUCT MADE IN AUSTRIA

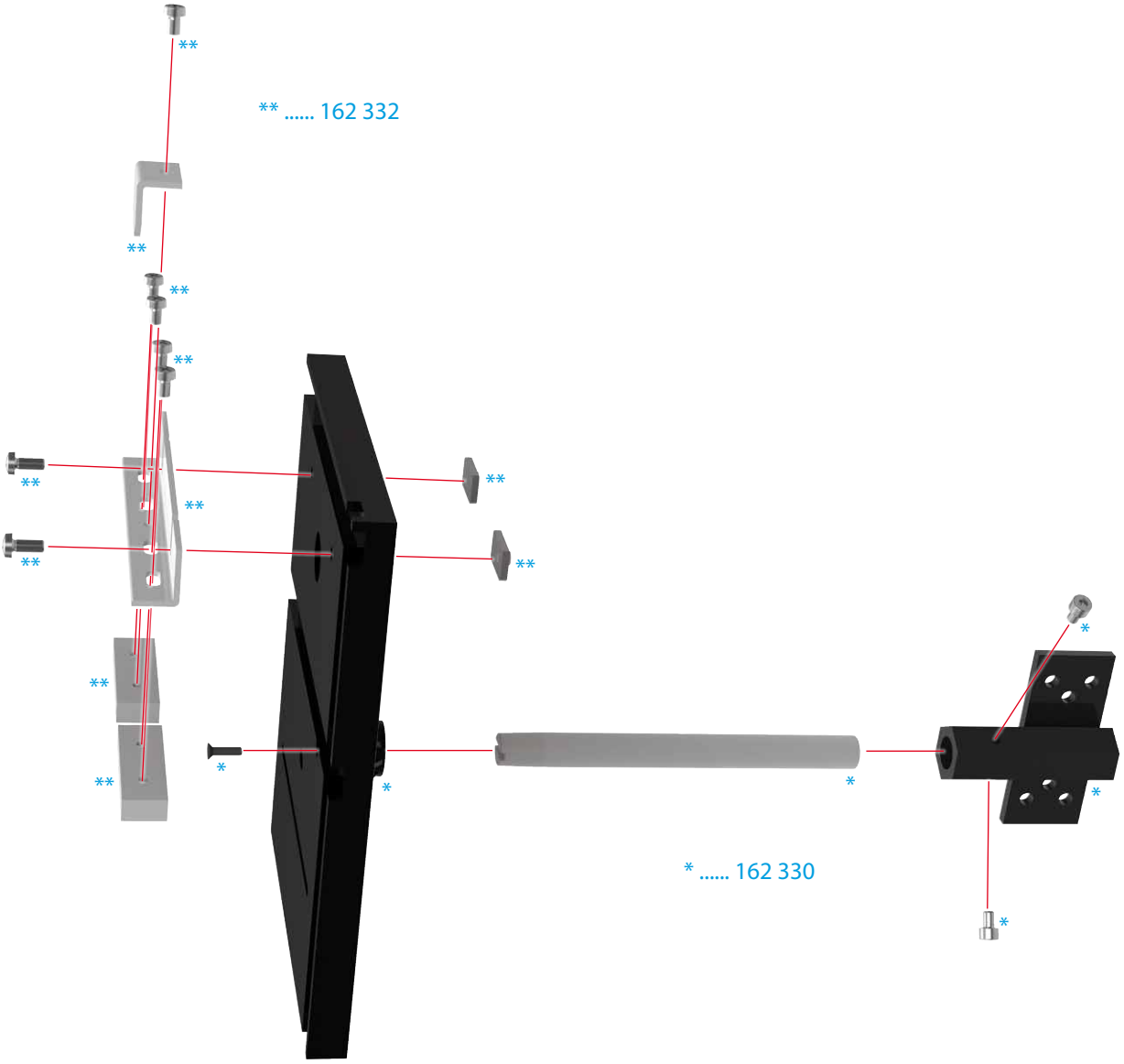
** 162 332
**
*
* 162 330

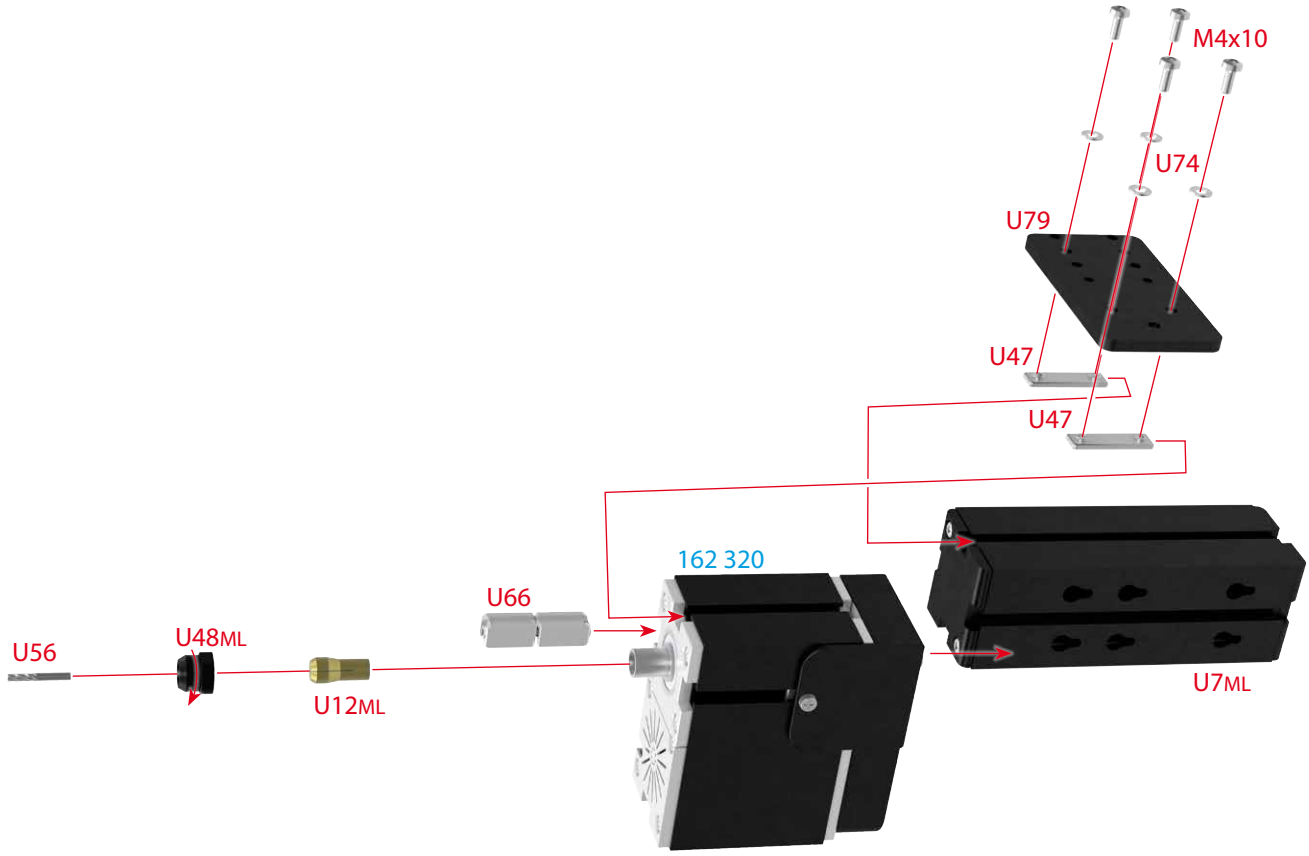
M4x10
U74
U79
U47
U47
162 320
U66
U56
U48ML
U12ML
U7ML

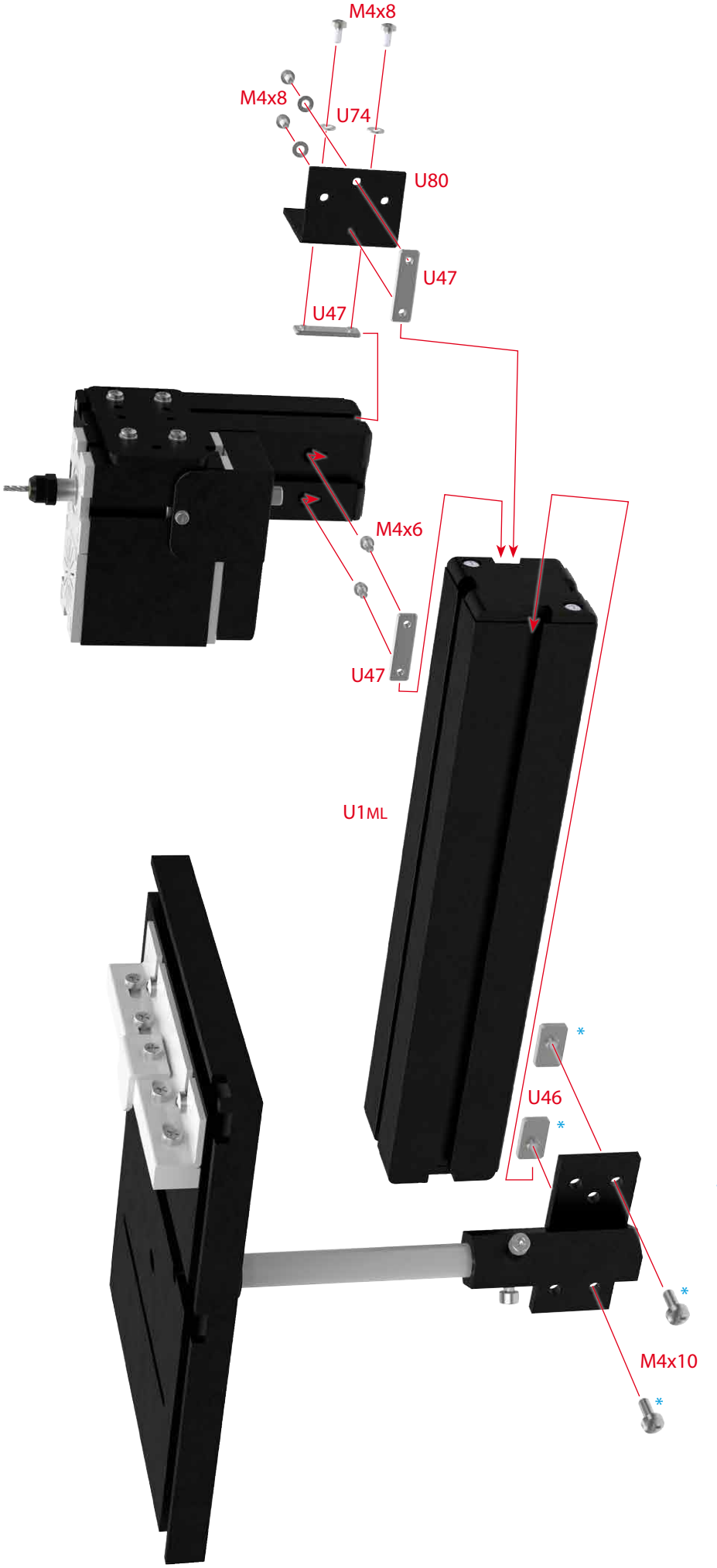

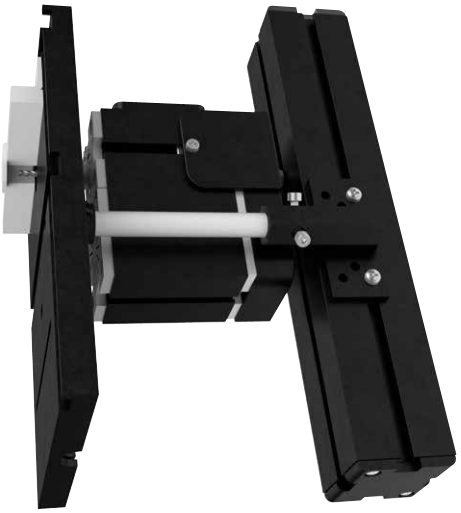

* 162 330

www.thecooltool.com
Fabriksgasse 15 | 2340 Mödling
Phone +43 2236 892 666 | AUSTRIA
contact us at info@thecooltool.com

Vorbehaltlich Fehler • *Errors excepted*

VS_166044-Ref19-11-14

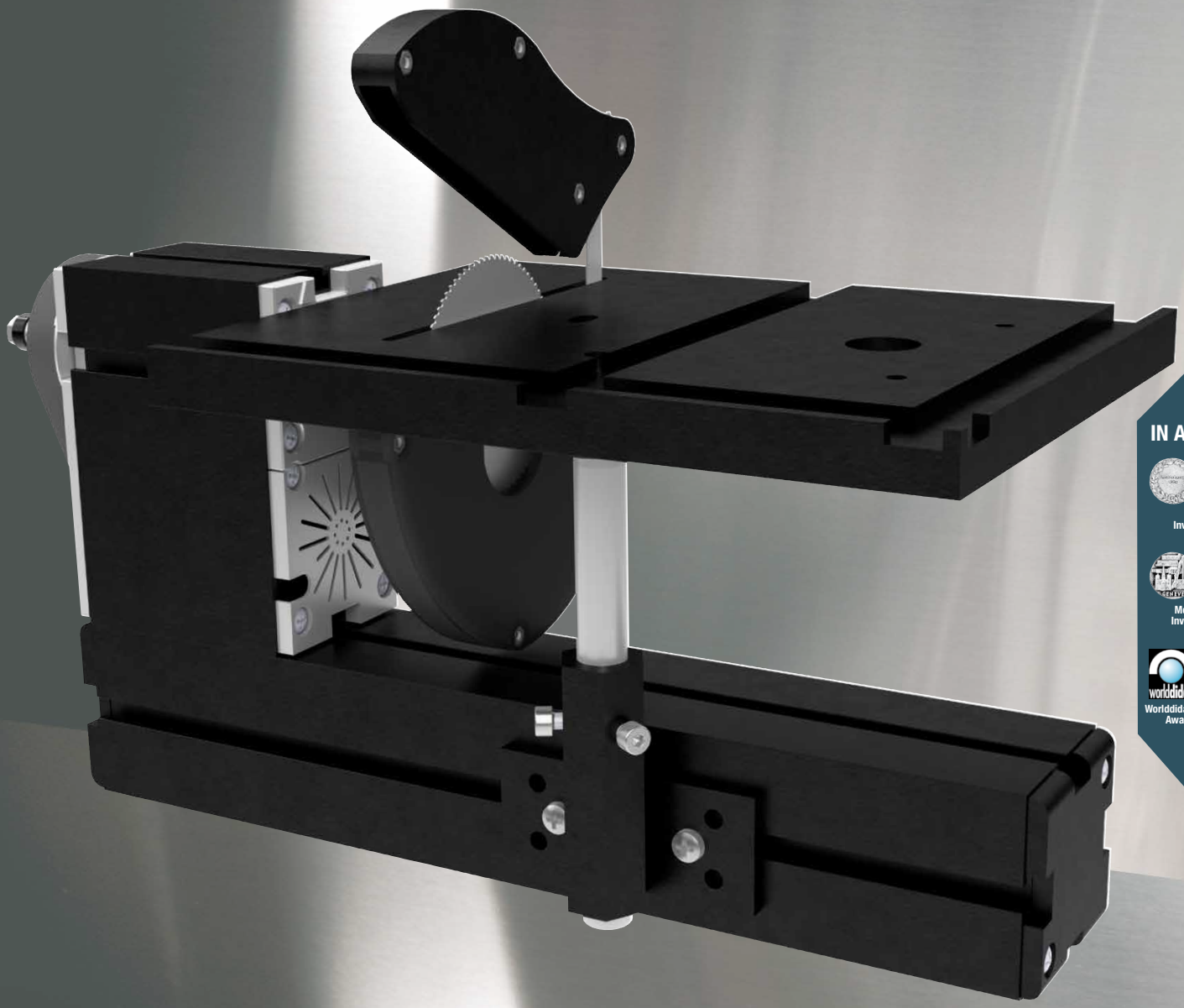

MADE IN AUSTRIA

Silver medal Inventions Vienna

Médaille d'argent Inventions Genève

Worlddidac Award

Silver medal Nuremberg

[KREISSÄGE]

[CIRCULAR SAW]

[SCIE CIRCULAIRE]

[SIERRA CIRCULAR]

The tool est. 1982 QUALITY PRODUCT MADE IN AUSTRIA

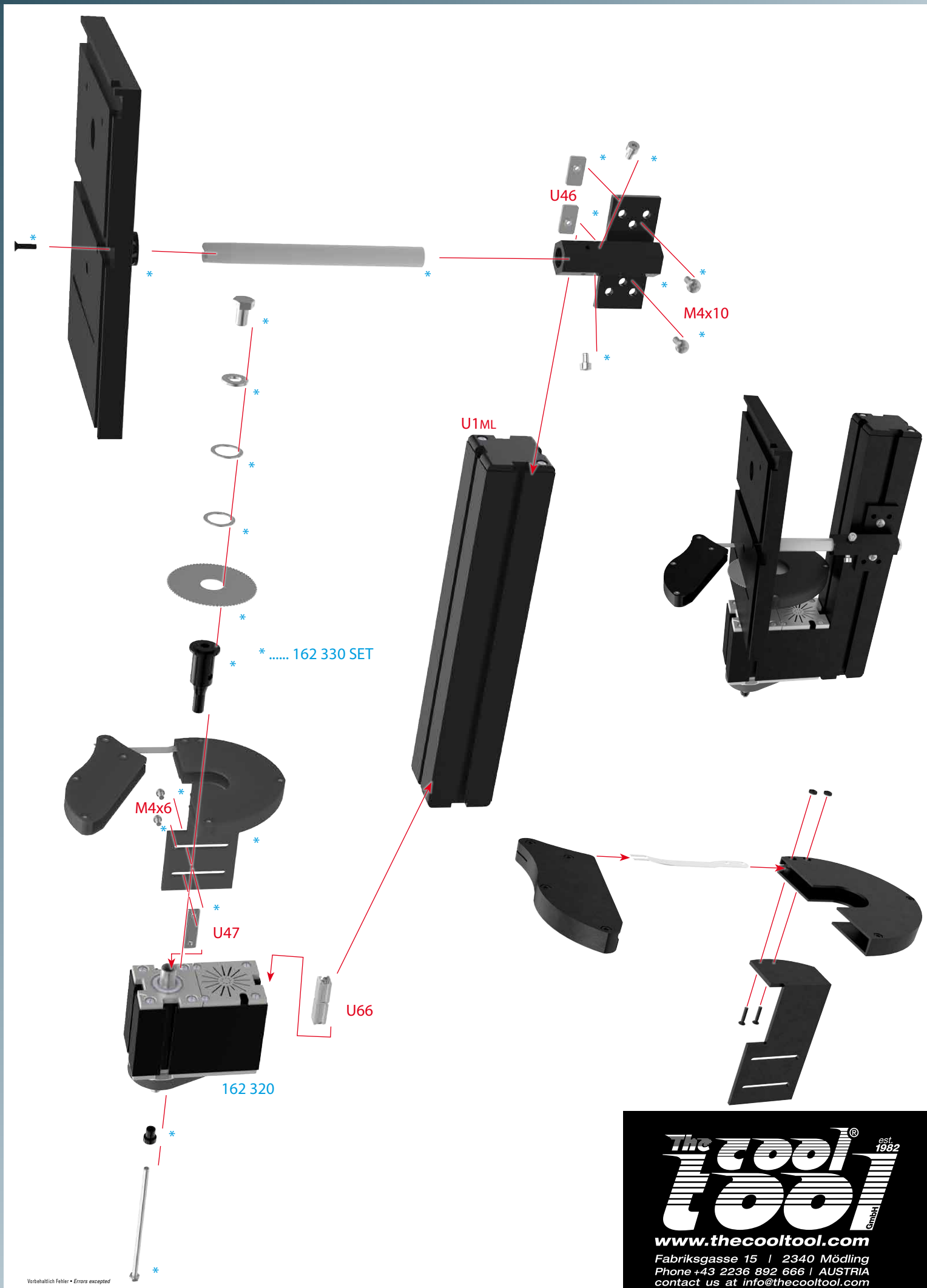

Vorbehaltlich Fehler • *Errors excepted*

The cool tool® GmbH est. 1982
www.thecooltool.com
Fabriksgasse 15 | 2340 Mödling
Phone +43 2236 892 666 | AUSTRIA
contact us at info@thecooltool.com

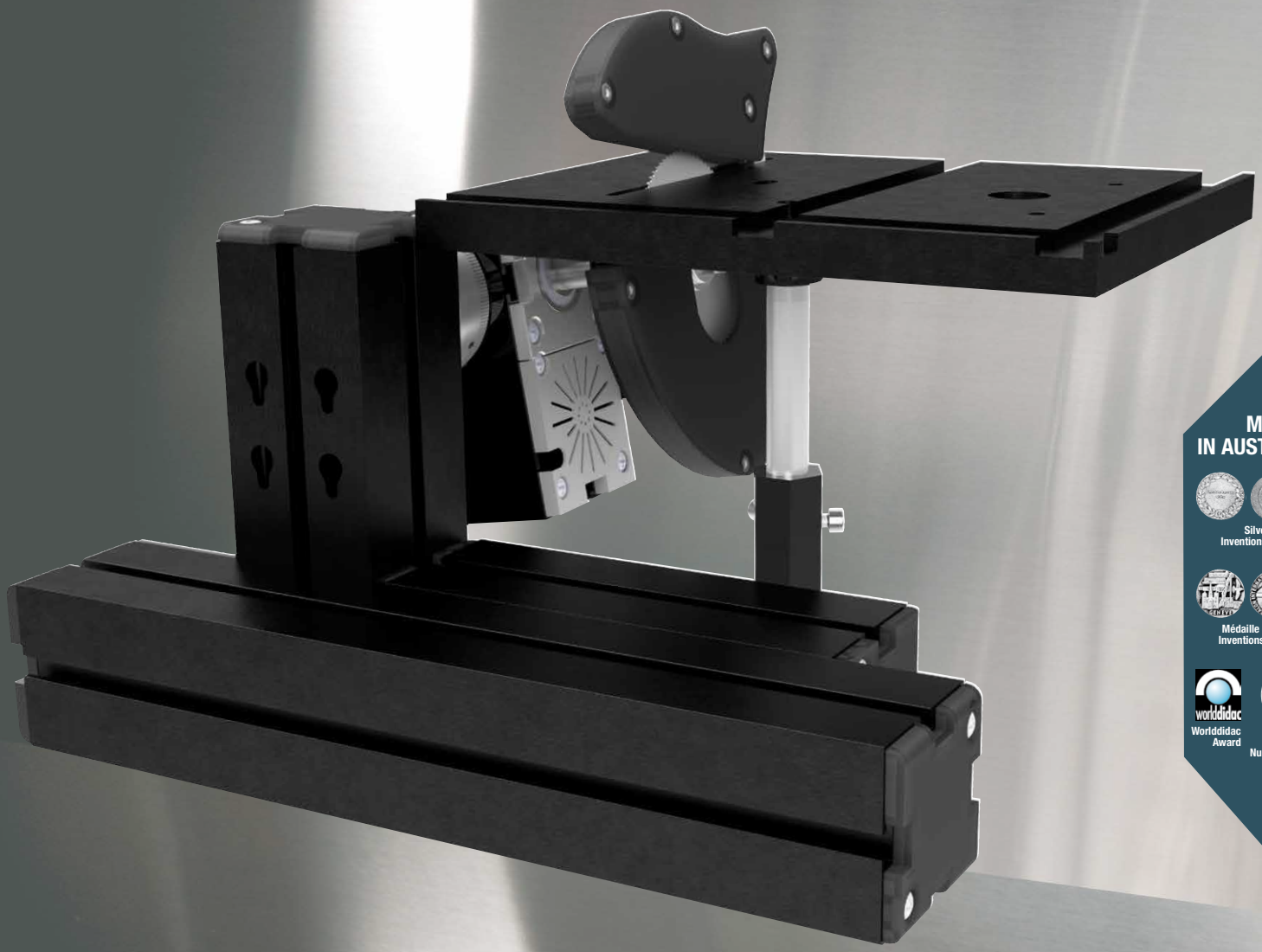

VS_166044-Ref19-11-14

MADE IN AUSTRIA

Silver medal Inventions Vienna

Médaille d'argent Inventions Genève

Worlddidac Award

Silver medal Nuremberg

[KREISSÄGE SCHRÄG]

[CIRCULAR SAW TILTED]

[SCIE CIRCULAIRE]

[SIERRA CIRCULAR]

The tool company est. 1982 QUALITY PRODUCT MADE IN AUSTRIA

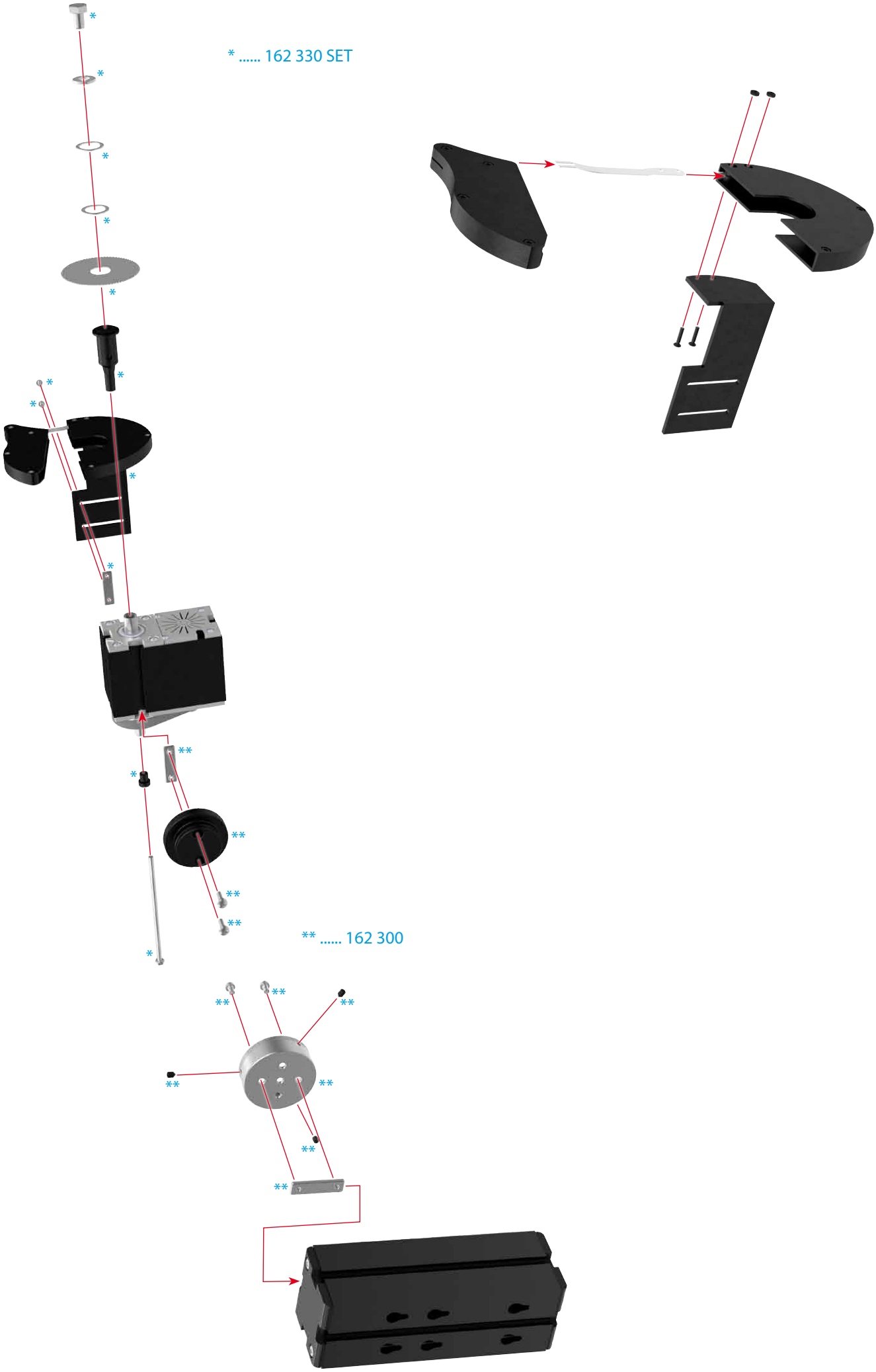
* ..... 162 330 SET
** 162 300

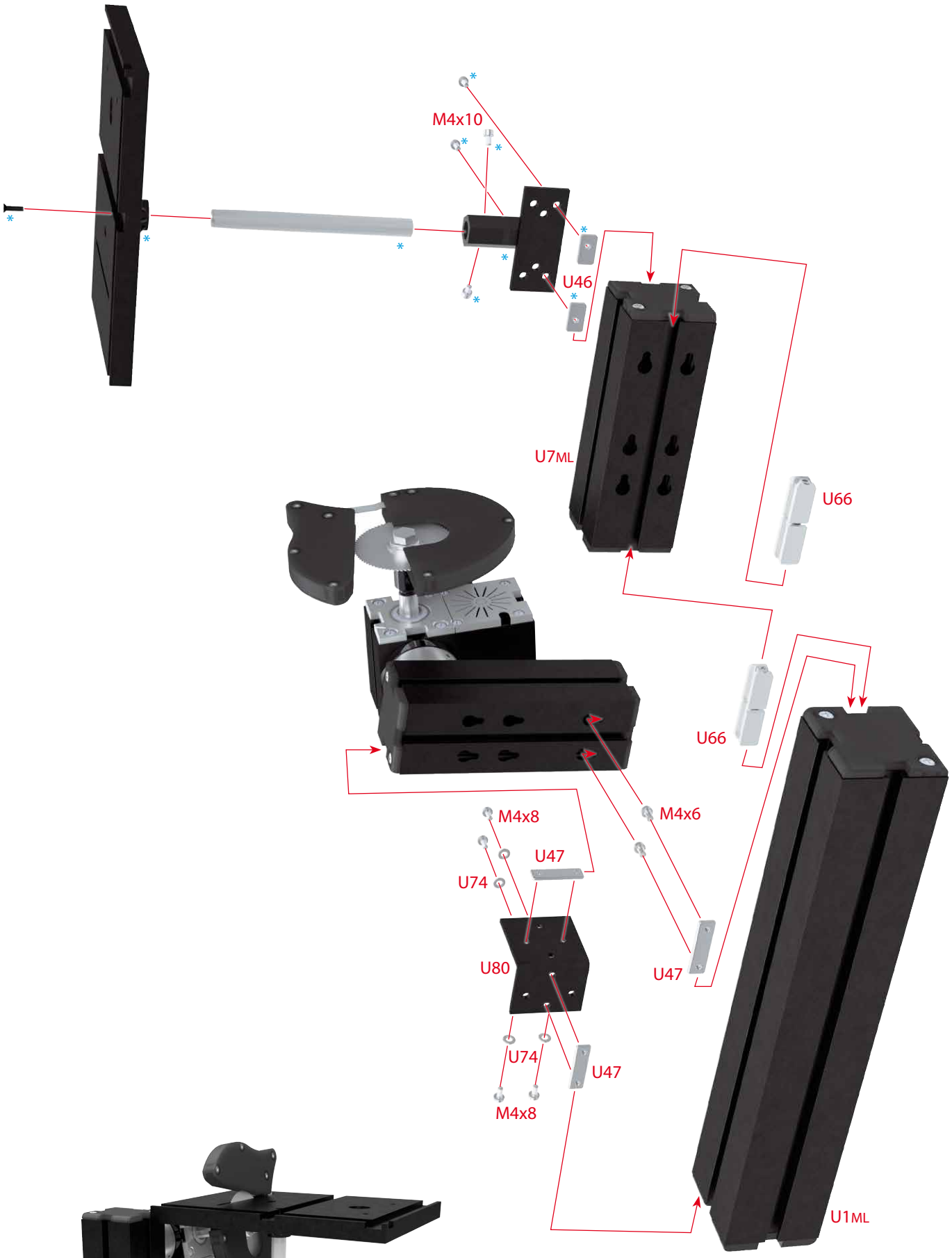

Vorbehaltlich Fehler • *Errors excepted*

The cool tool® GmbH est. 1982
www.thecooltool.com
Fabriksgasse 15 | 2340 Mödling
Phone +43 2236 892 666 | AUSTRIA
contact us at info@thecooltool.com

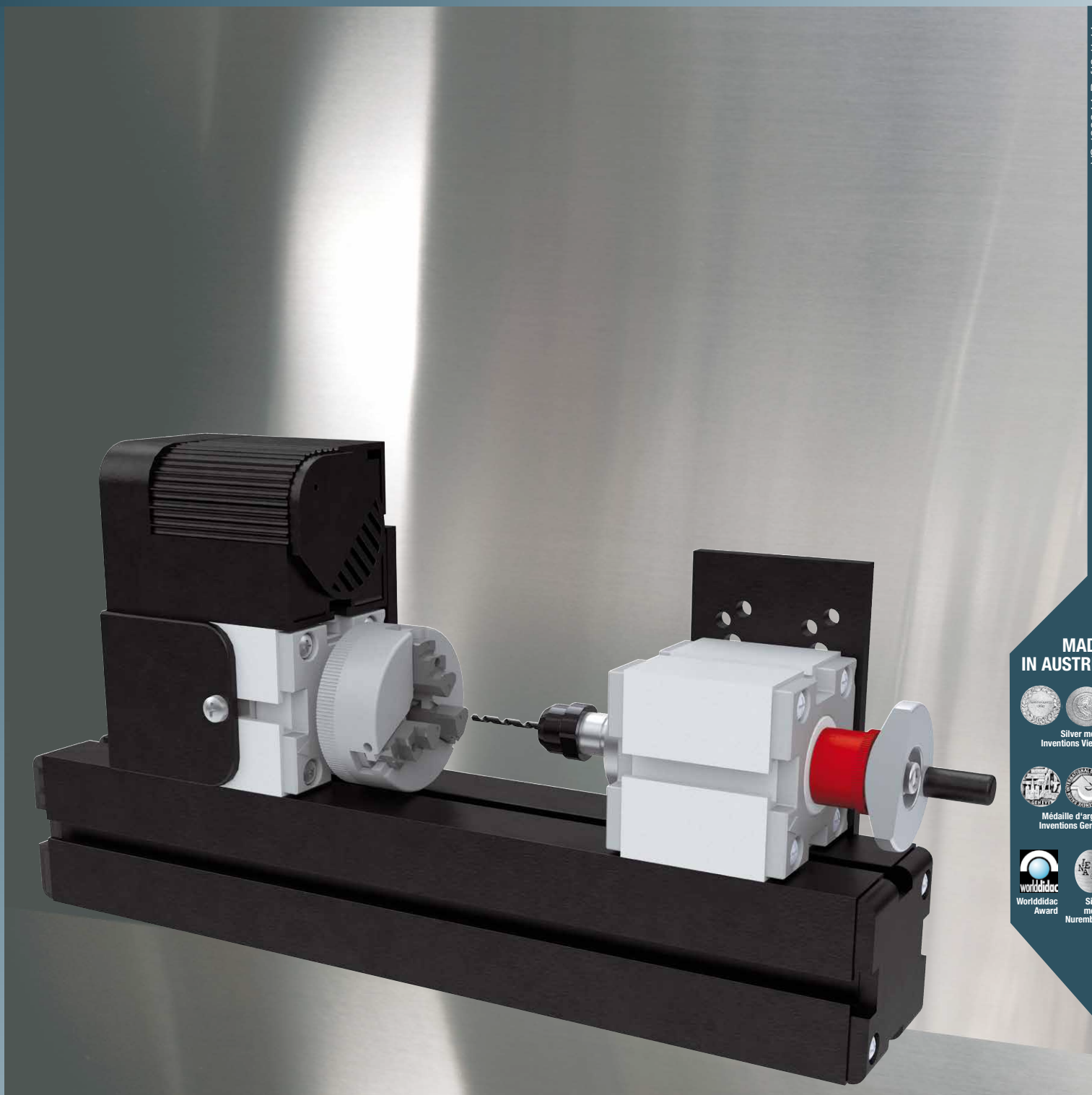

VS_166044-Ref19-11-14

MADE IN AUSTRIA

Silver medal Inventions Vienna

Médaille d'argent Inventions Genève

Worlddidac Award

Silver medal Nuremberg

[ZENTRIERBOHRMASCHINE]

[PERCEUSE À CENTRER]

[CENTER DRILLING MACHINE]

[TALADRADORA DE CENTRAR]

The tool company est. 1982 QUALITY PRODUCT MADE IN AUSTRIA

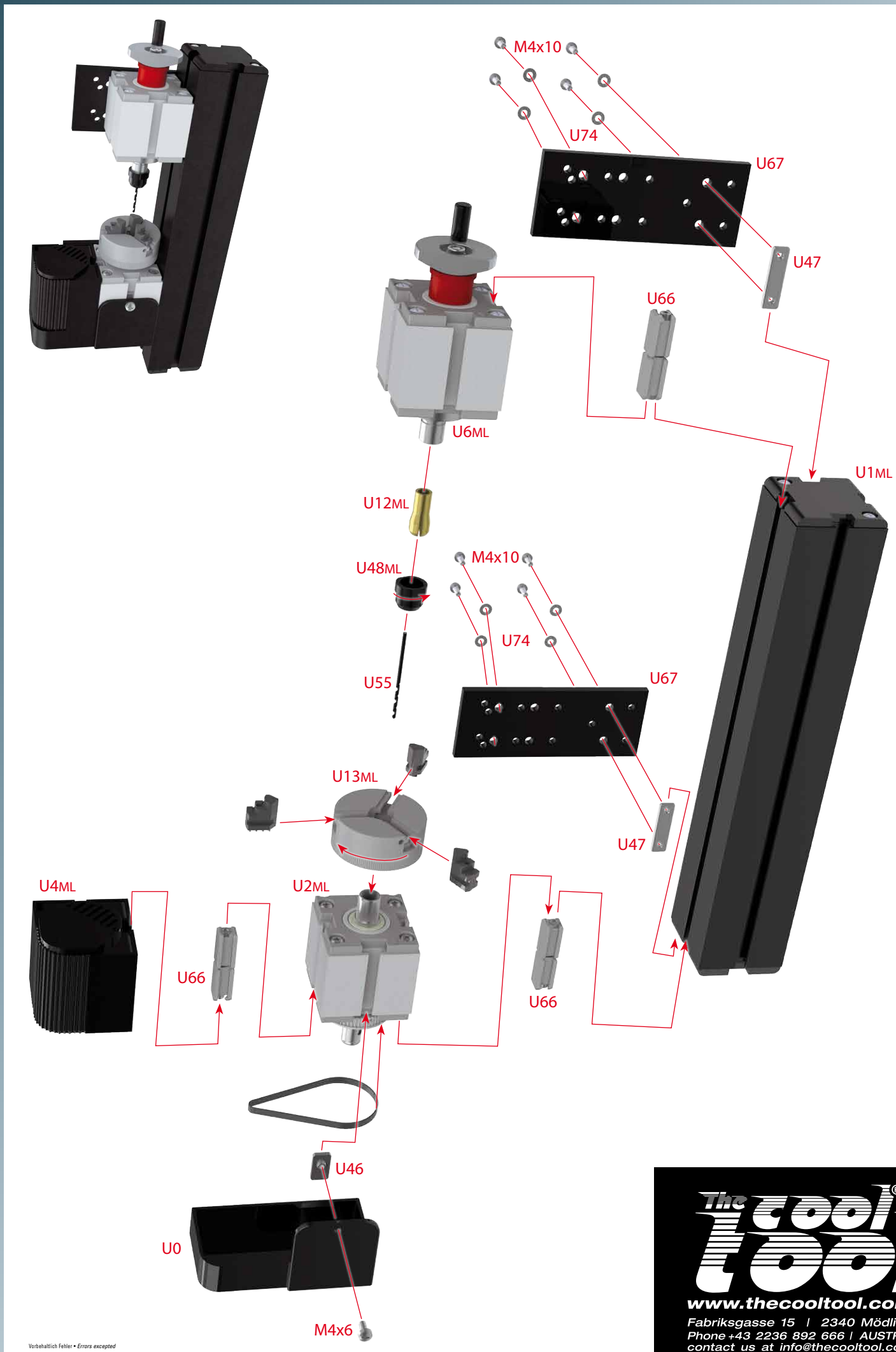

Vorbehaltlich Fehler • *Errors excepted*

The cool tool® GmbH est. 1982
www.thecooltool.com
Fabriksgasse 15 | 2340 Mödling
Phone +43 2236 892 666 | AUSTRIA
contact us at info@thecooltool.com

VS_166044-Ref19-11-14

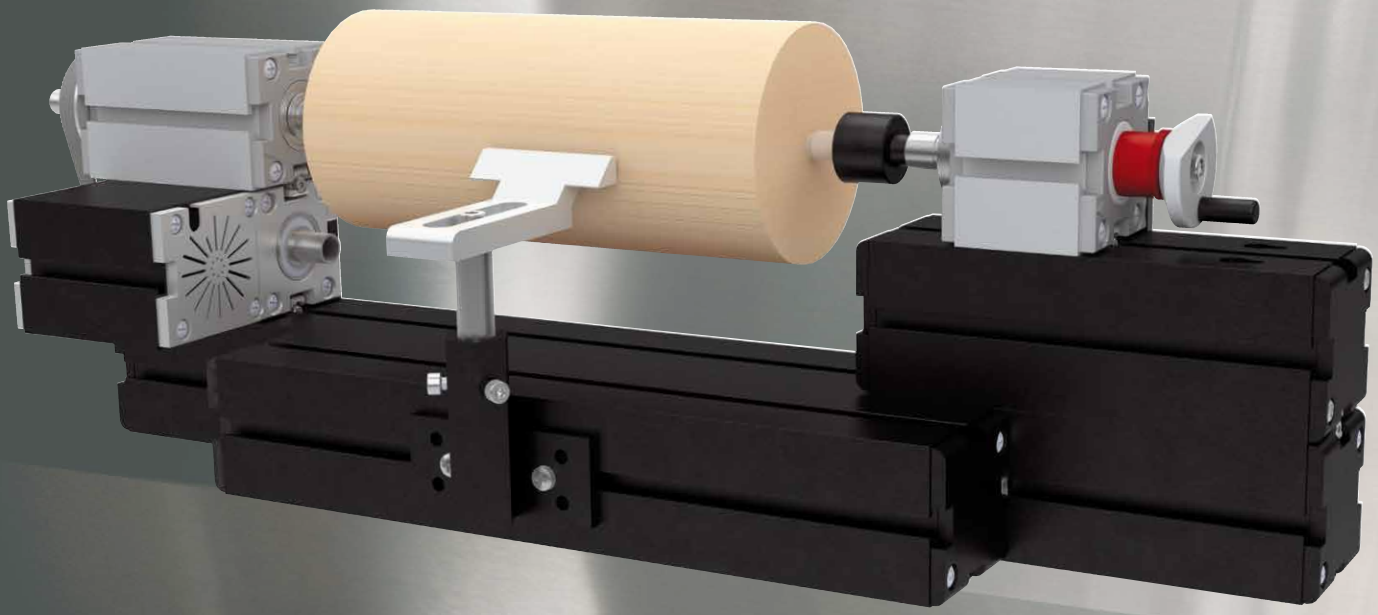

MADE IN AUSTRIA

Silver medal Inventions Vienna

Médaille d'argent Inventions Genève

Worlddidac Award

Silver medal Nuremberg

[POWER- DRECHSELBANK]

[POWER- WOOD LATHE]

[GRAND TOUR À BOIS]

[TORNO DE MADERA GRANDE]

The tool company est. 1982 QUALITY PRODUCT MADE IN AUSTRIA

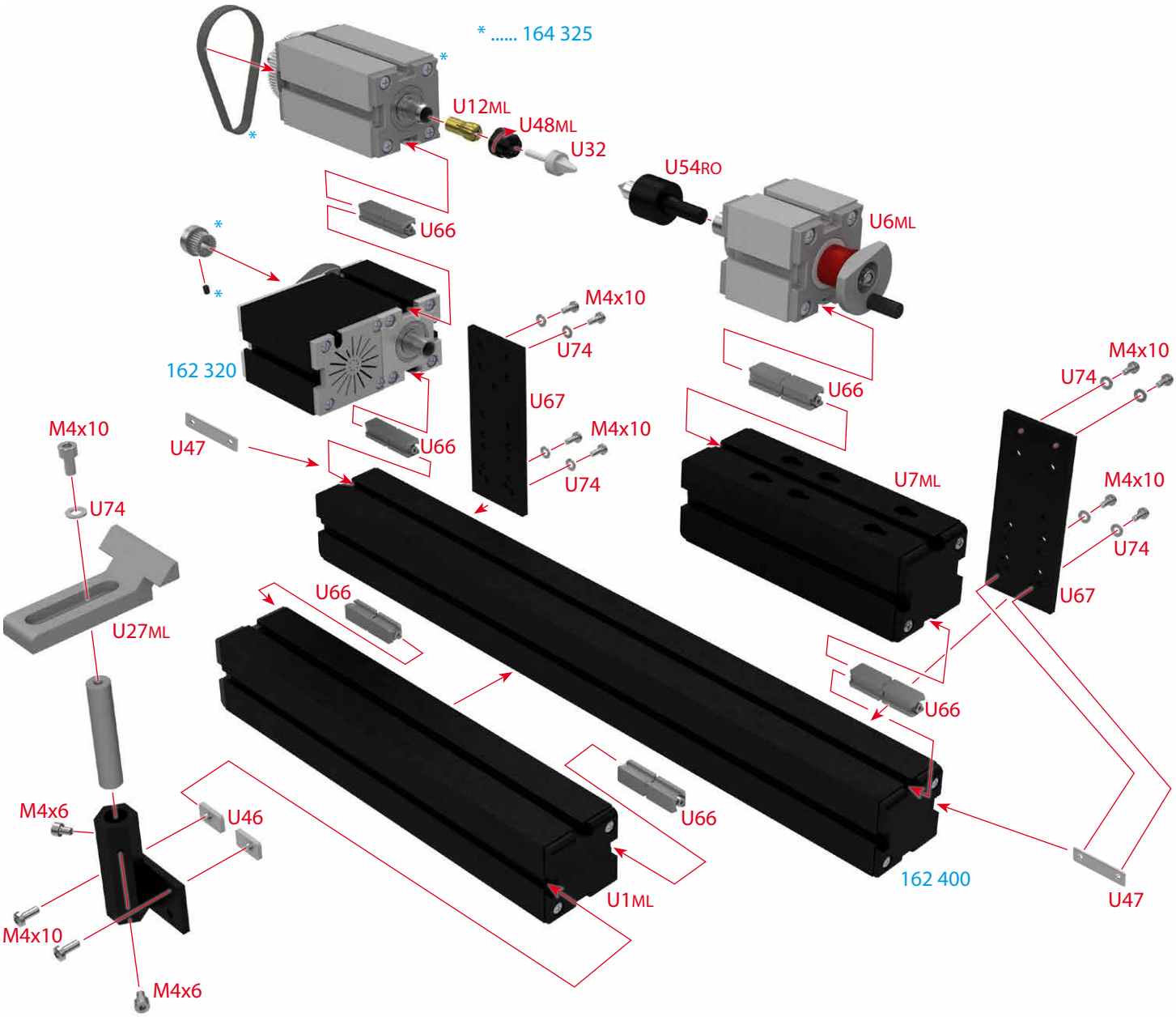

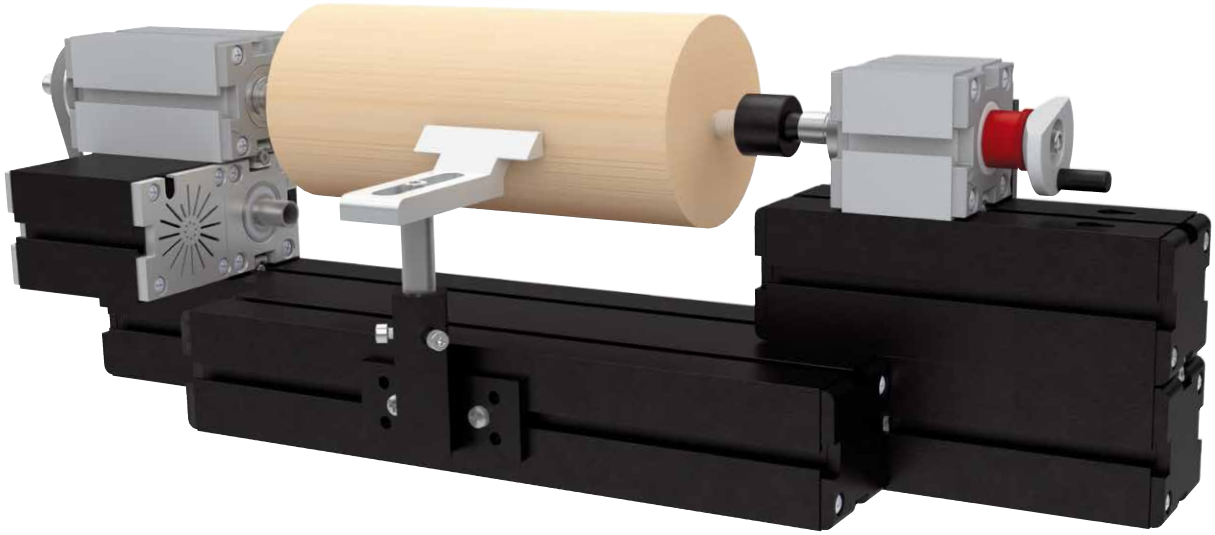

The cool tool® est. 1982 GmbH
www.thecooltool.com
Fabriksgasse 15 | 2340 Mödling
Phone +43 2236 892 666 | AUSTRIA
contact us at info@thecooltool.com

Vorbehaltlich Fehler • *Errors excepted*

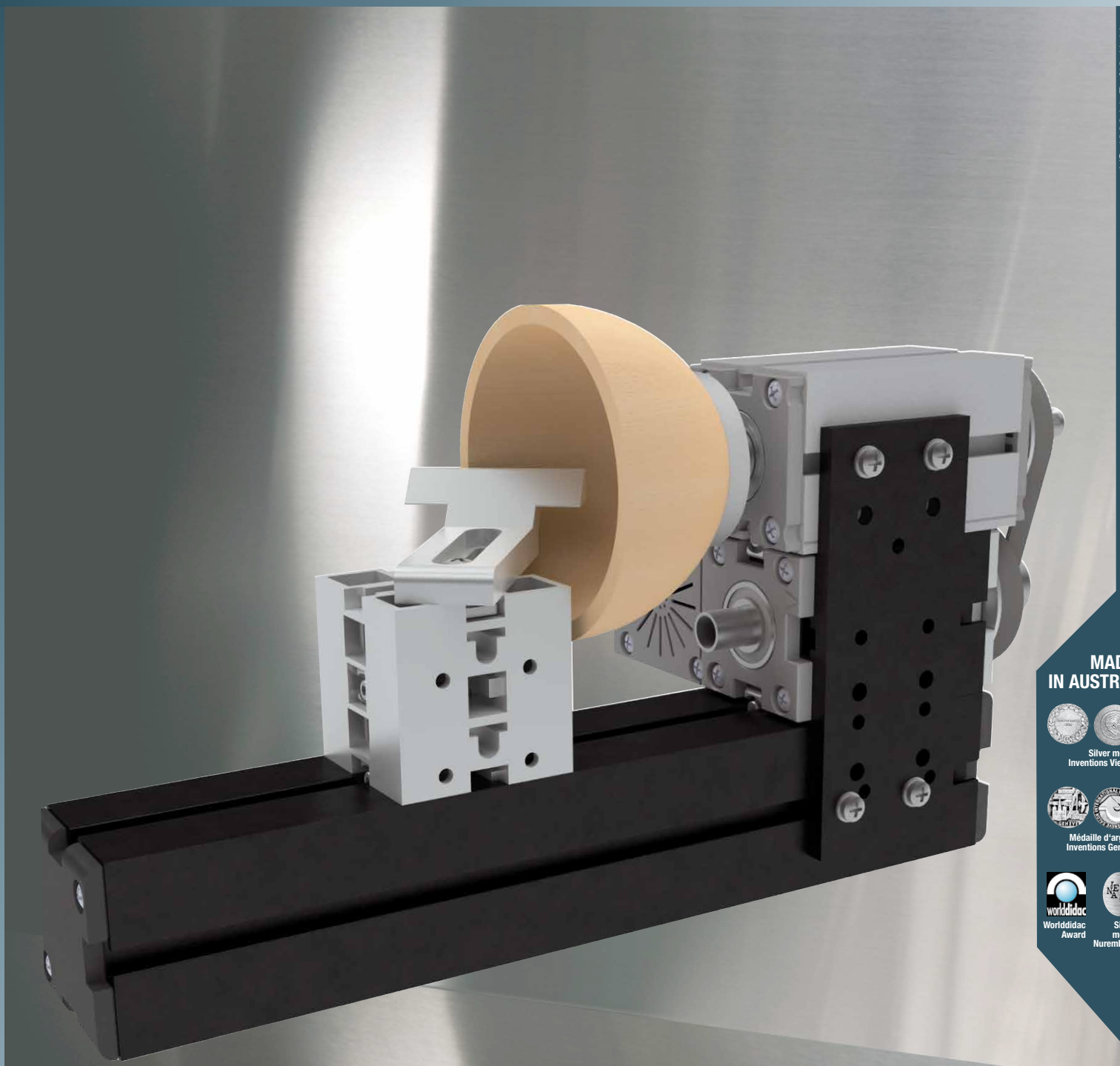

VS_166044-Ref19-11-14

MADE IN AUSTRIA

Silver medal Inventions Vienna

Médaille d'argent Inventions Genève

Worlddidac Award

Silver medal Nuremberg

[QUERHOLZDRECHSELN]

[FACEPLATE TURNING]

[TOURNAGE DE BOIS TAILLÉ CONTRE LES FIBRES]

[TORNEAR TRAVIESAS]

The tool® est. 1982 QUALITY PRODUCT MADE IN AUSTRIA

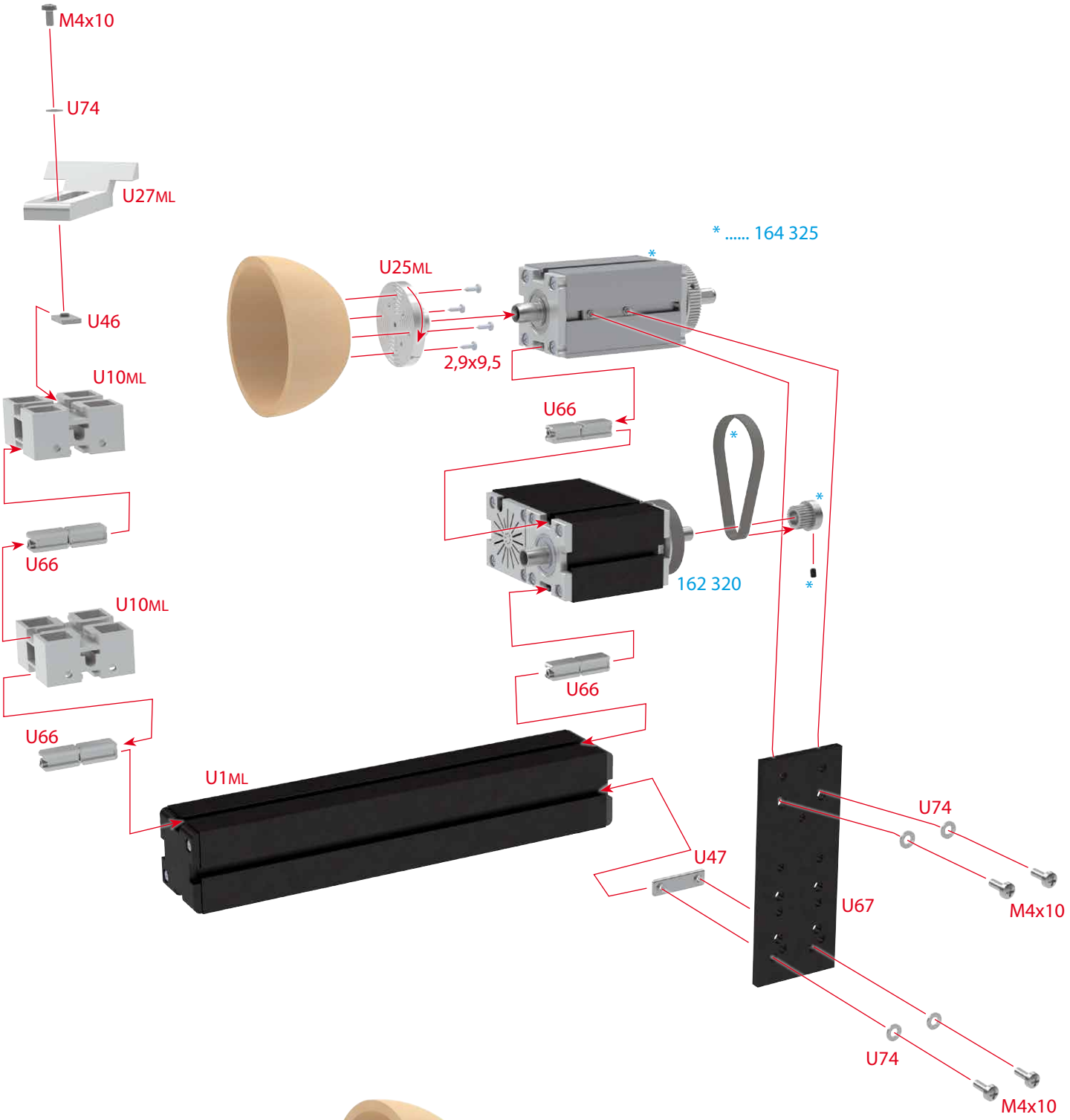

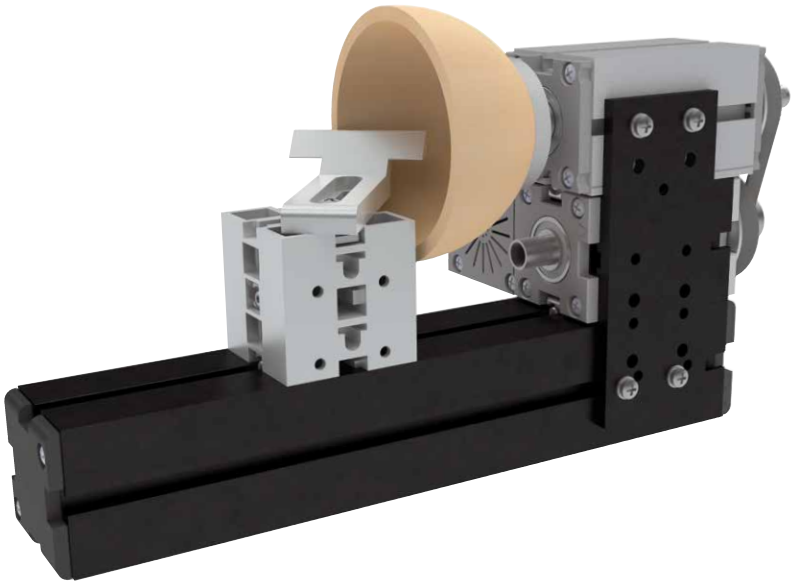

Vorbehaltlich Fehler • *Errors excepted*

www.thecooltool.com
Fabriksgasse 15 | 2340 Mödling
Phone +43 2236 892 666 | AUSTRIA
contact us at info@thecooltool.com

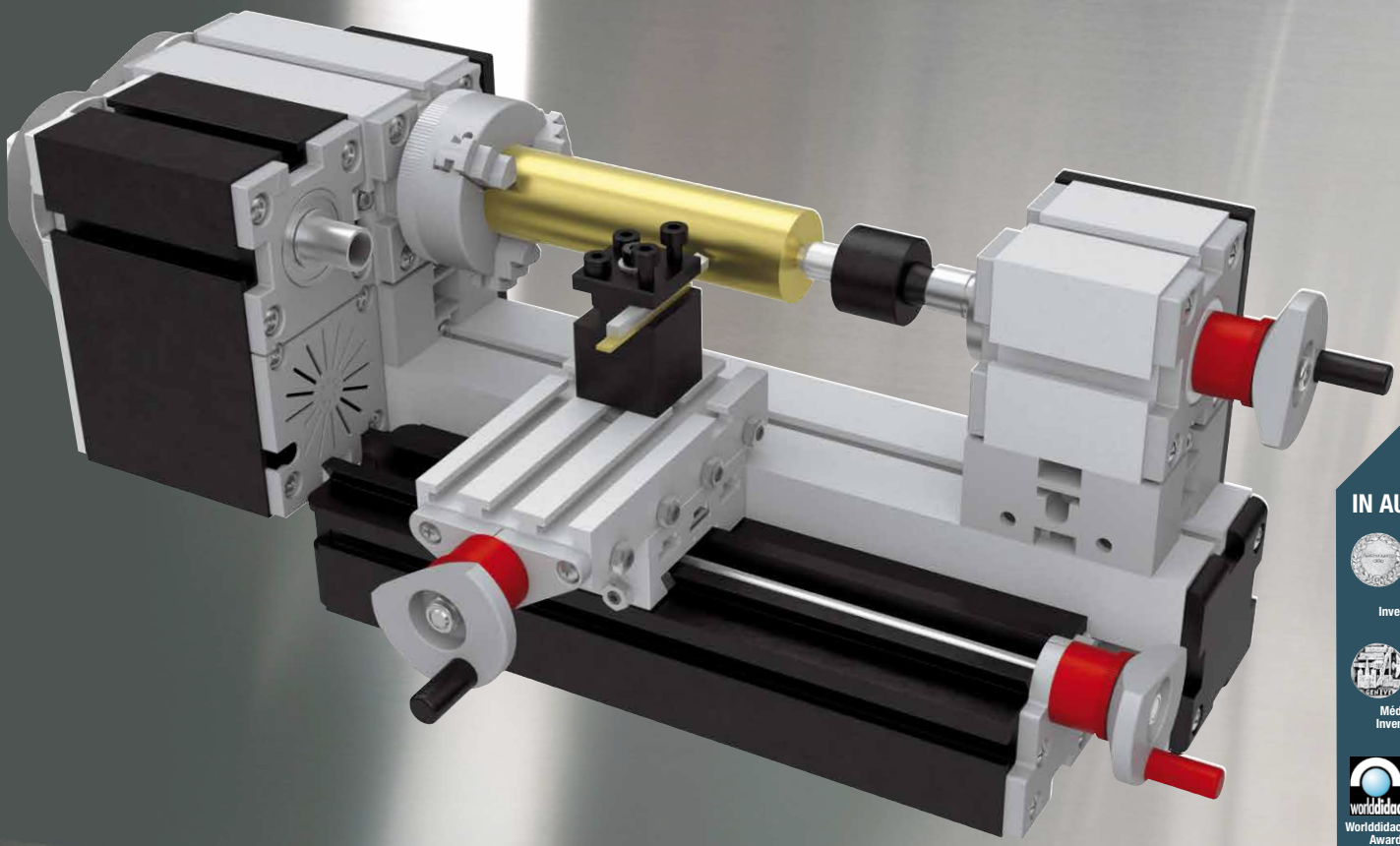

VS_166044-Ref19-11-14

MADE IN AUSTRIA

Silver medal Inventions Vienna

Médaille d'argent Inventions Genève

Worlddidac Award

Silver medal Nuremberg

[POWER DREHBANK]

[POWER LATHE]

[GRAND TOUR]

[TORNO DE METAL GRANDE]

The tool company est. 1982 QUALITY PRODUCT MADE IN AUSTRIA

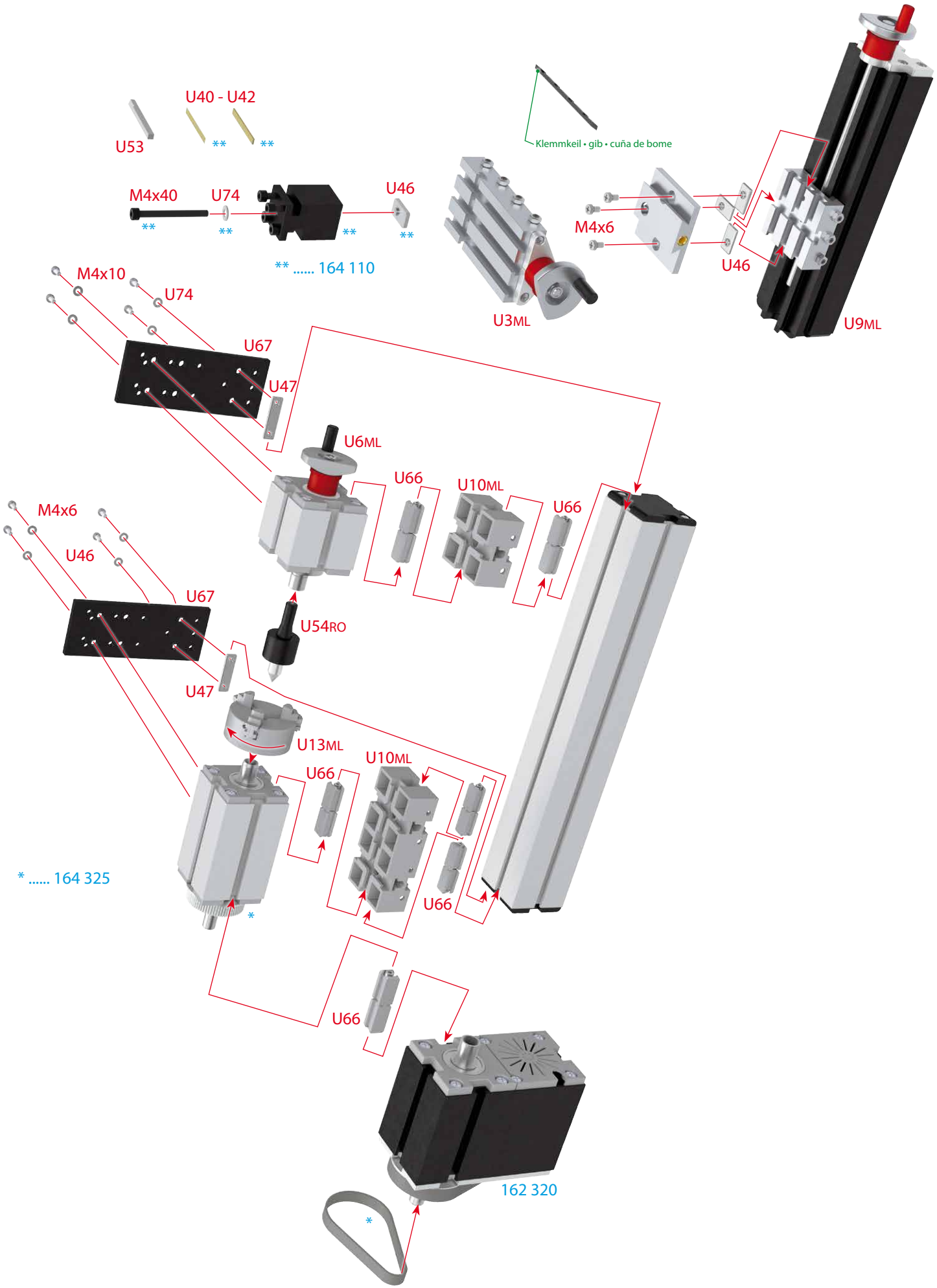
U53
U40 - U42
**
**
Klemmkeil • gib • cuña de bome
M4x40
U74
U46
**
**
**
**
** 164 110
M4x6
U46
U3ML
U9ML
M4x10
U74
U67
U47
U6ML
U66
U10ML
U66
M4x6
U46
U67
U54RO
U47
U13ML
U10ML
U66
* 164 325
*
U66
U66
162 320
*

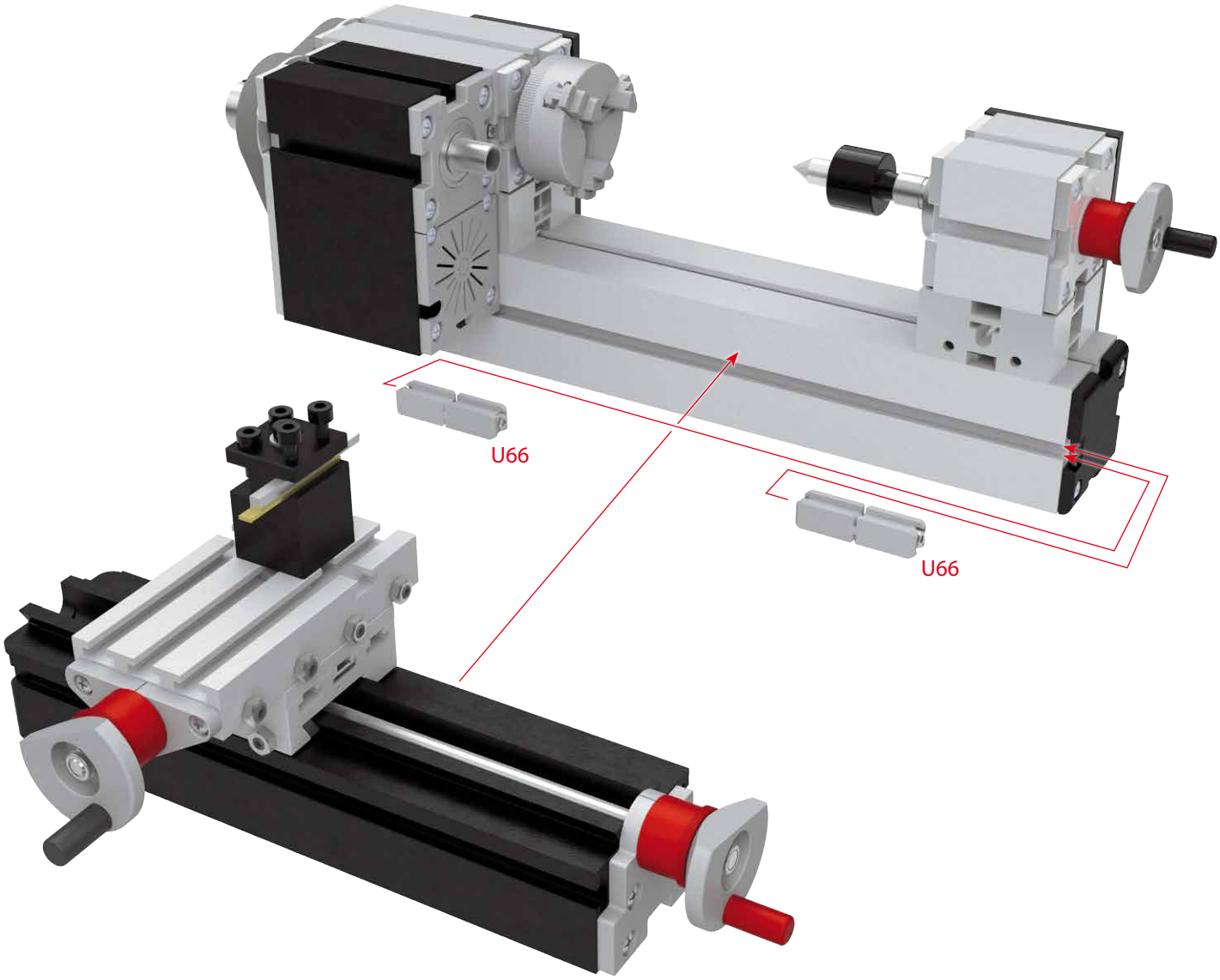

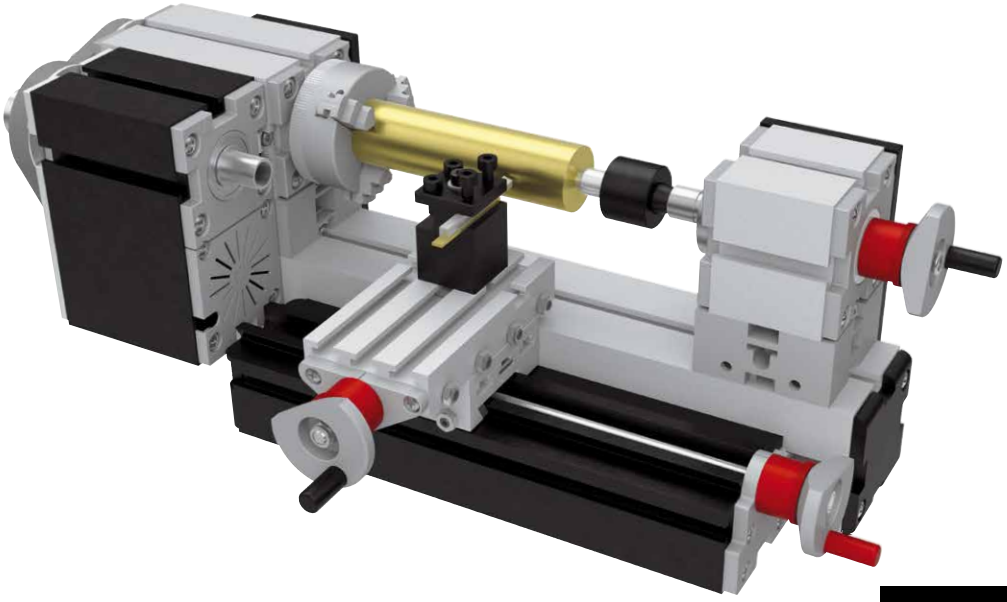

www.thecooltool.com
Fabriksgasse 15 | 2340 Mödling
Phone +43 2236 892 666 | AUSTRIA
contact us at info@thecooltool.com

Vorbehaltlich Fehler • *Errors excepted*

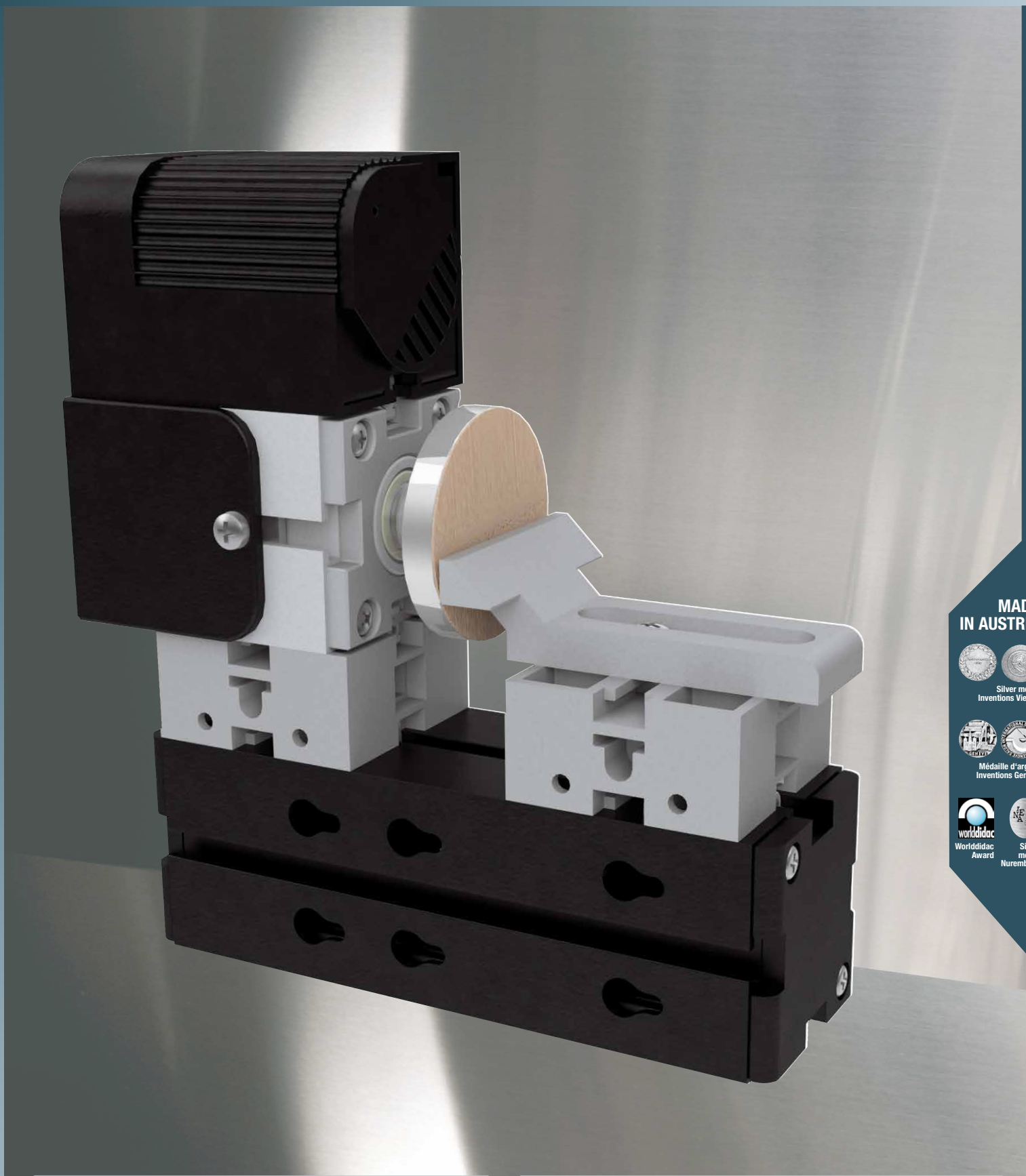

VS_166044-Ref19-11-14

MADE IN AUSTRIA

Silver medal Inventions Vienna

Médaille d'argent Inventions Genève

Worlddidac Award

Silver medal Nuremberg

[SCHLEIFMASCHINE]

[SANDING MACHINE]

[PONCEUSE]

[LIJADORA]

The tool company est. 1982 QUALITY PRODUCT MADE IN AUSTRIA

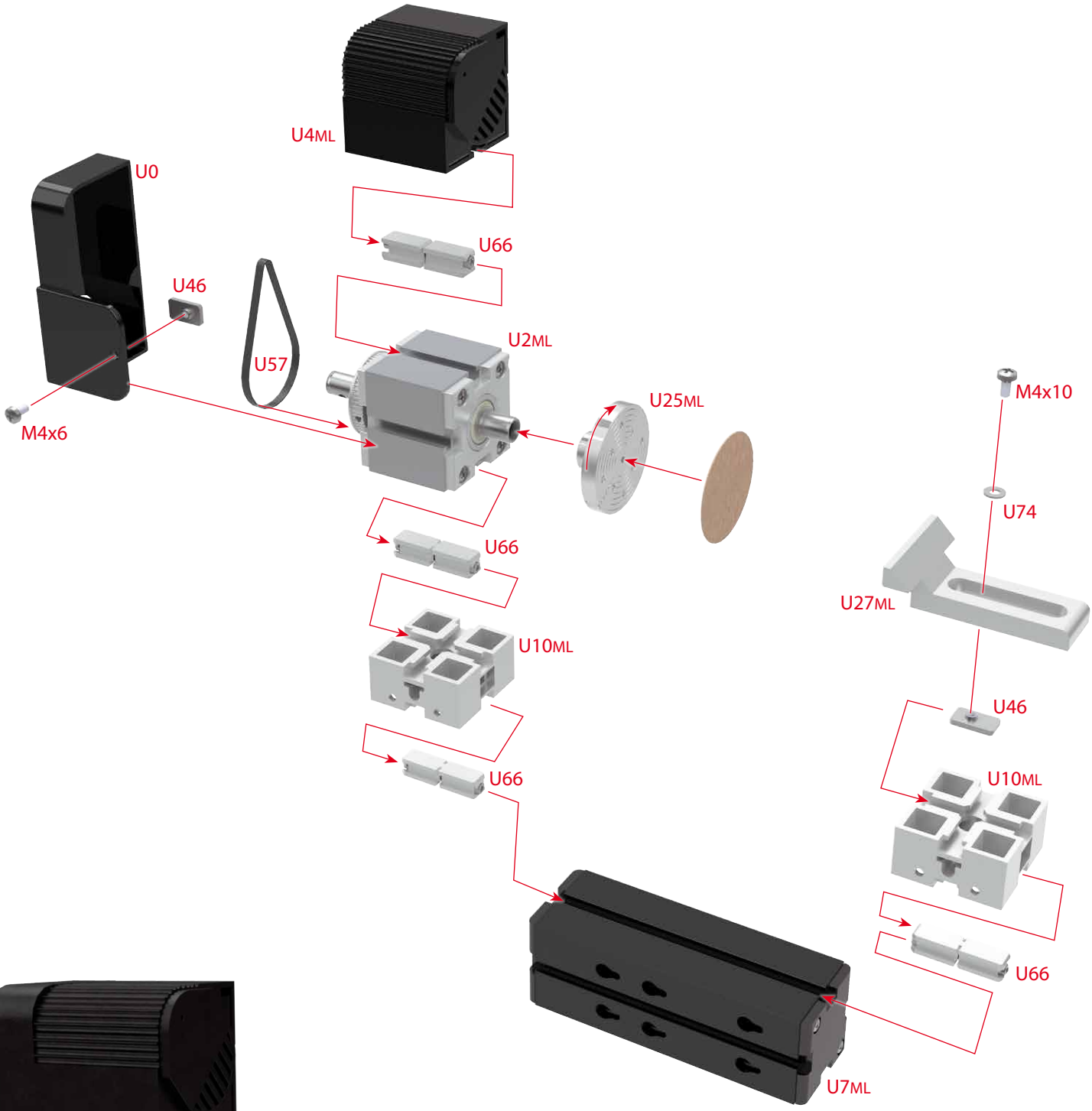

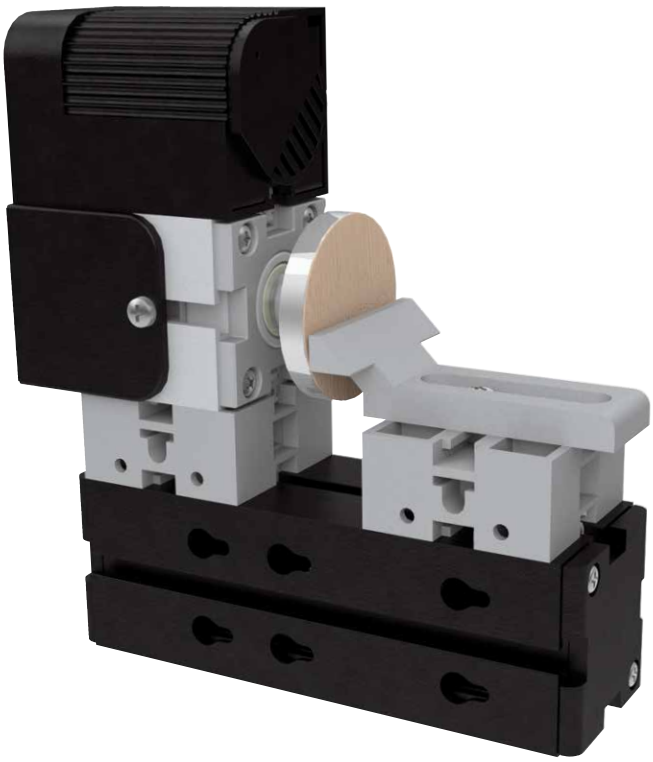

Vorbehaltlich Fehler • *Errors excepted*

www.thecooltool.com
Fabriksgasse 15 | 2340 Mödling
Phone +43 2236 892 666 | AUSTRIA
contact us at info@thecooltool.com

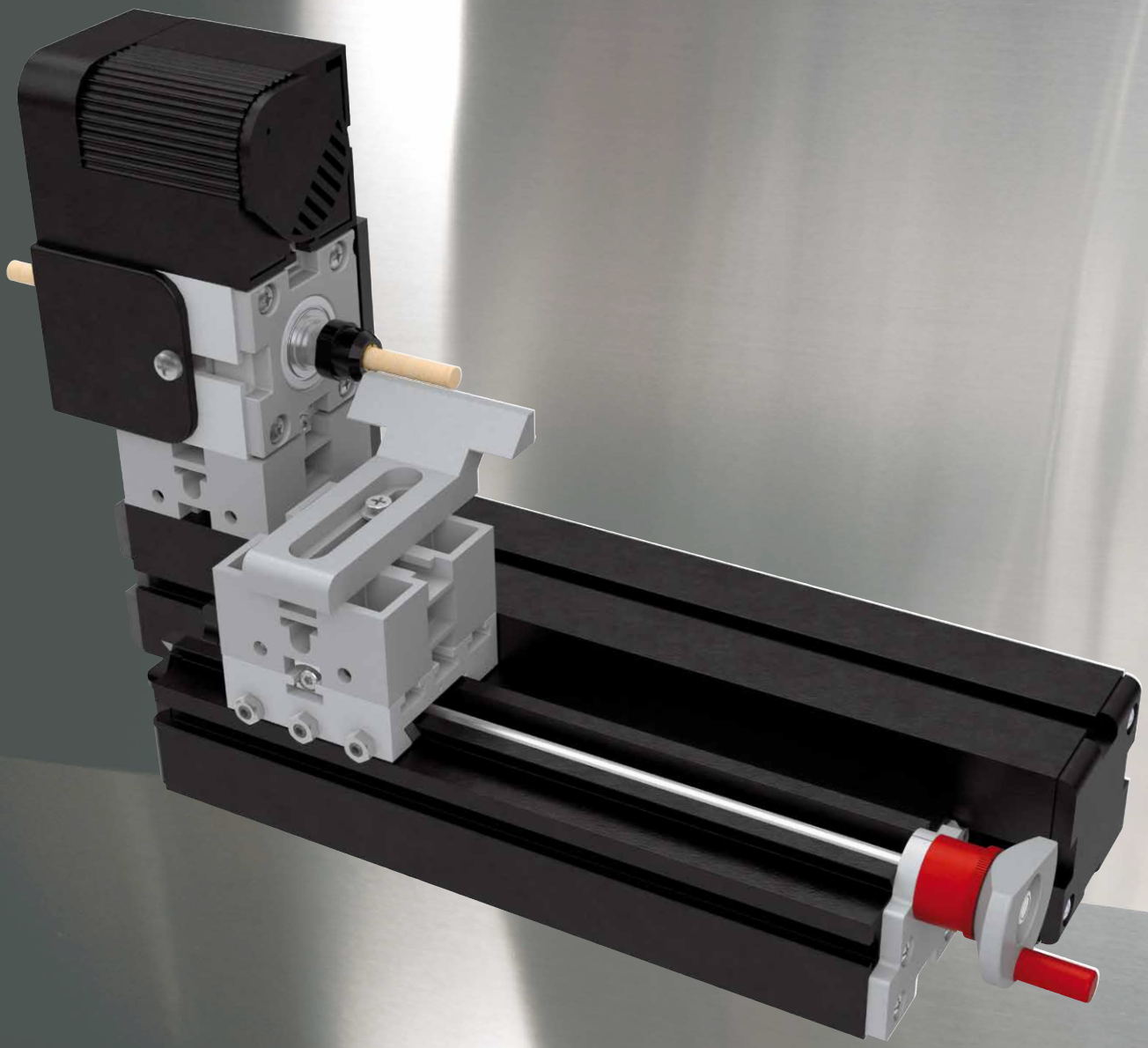

VS_166044-Ref19-11-14

MADE IN AUSTRIA

Silver medal Inventions Vienna

Médaille d'argent Inventions Genève

Worlddidac Award

Silver medal Nuremberg

[FILIGRANDRECHSELBANK]

[SMALL WOOD LATHE]

[MINI TOUR À BOIS]

[MINI TORNO DE MADERA]

The tool company est. 1982 QUALITY PRODUCT MADE IN AUSTRIA

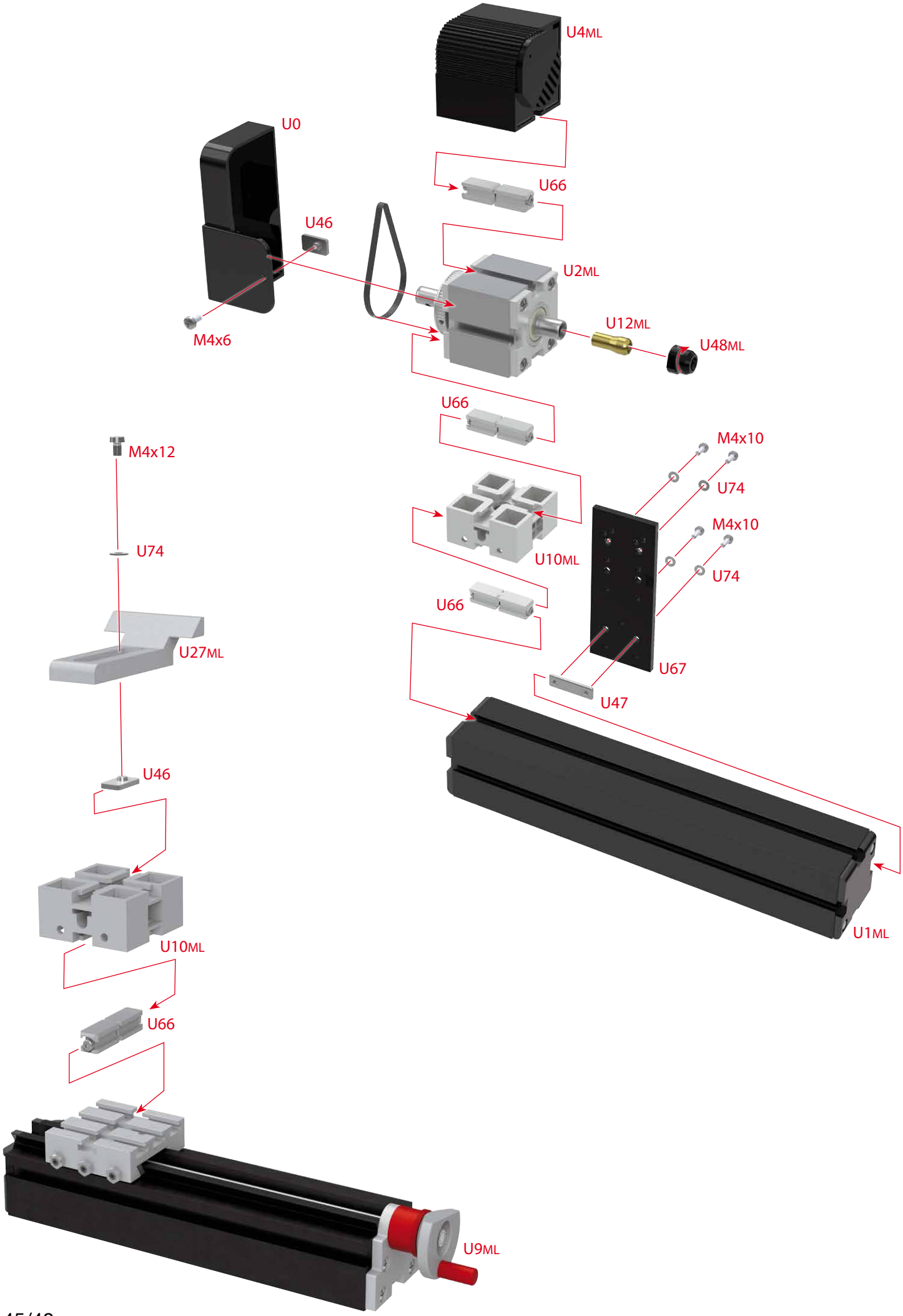
U4ML
U0
U66
U46
U2ML
M4x6
U12ML
U48ML
U66
M4x12
M4x10
U74
U74
M4x10
U10ML
U74
U66
U27ML
U67
U47
U46
U1ML
U10ML
U66
U9ML

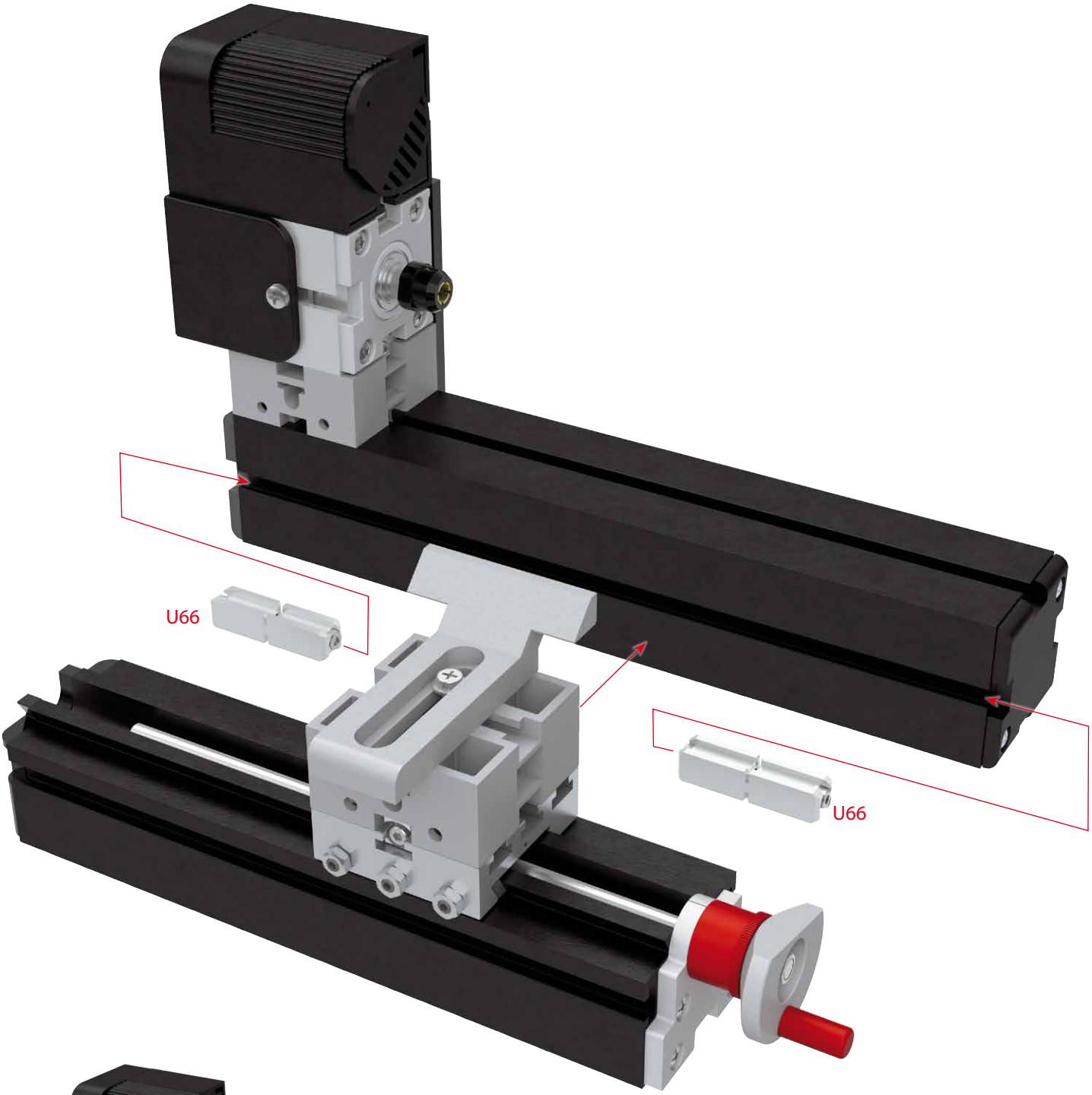

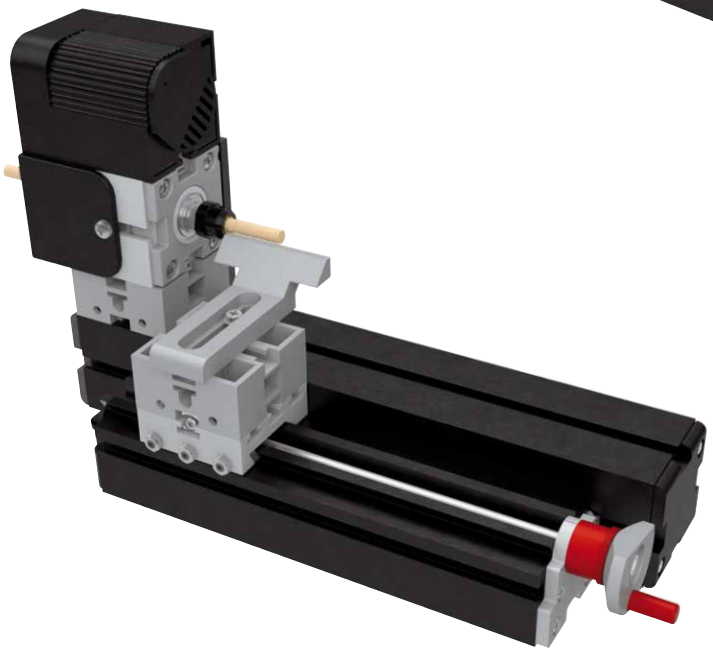

The cool tool® GmbH est. 1982
www.thecooltool.com
Fabriksgasse 15 | 2340 Mödling
Phone +43 2236 892 666 | AUSTRIA
contact us at info@thecooltool.com

Vorbehaltlich Fehler • *Errors excepted*

UNIMAT CNC

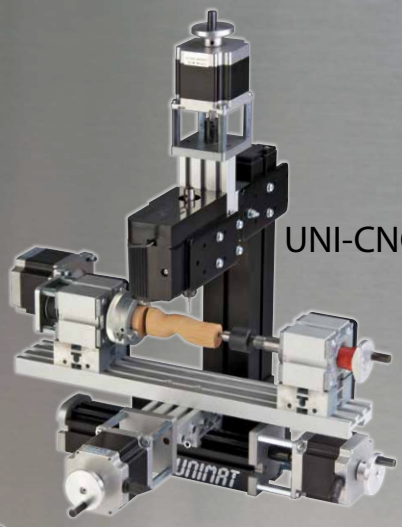

UNI-CNC-Set

UNI-Fraes3

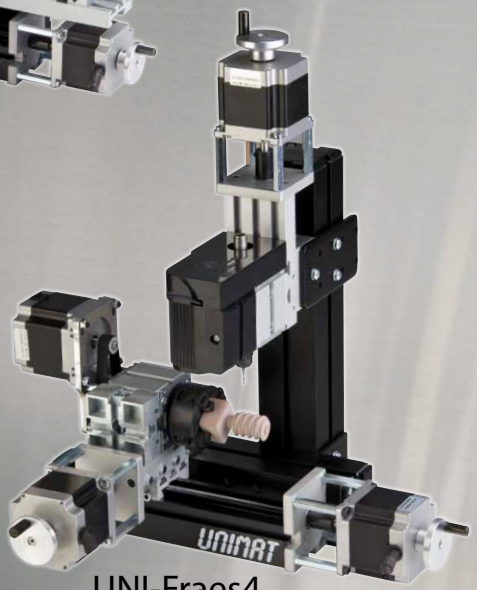

UNI-Fraes4

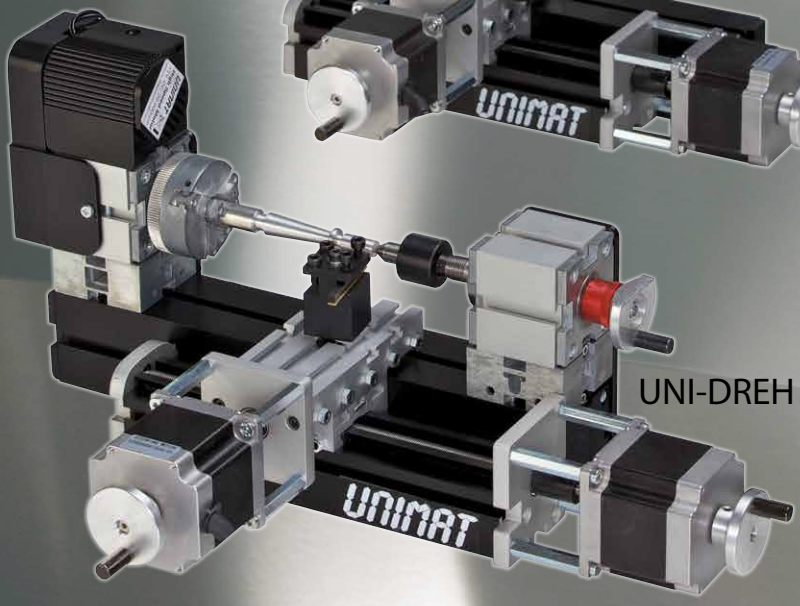

UNI-DREH

TCTCONT4
TCTCONT6

Vorbehaltlich Fehler • *Errors excepted*

The cool tool® GmbH est. 1982
www.thecooltool.com
Fabriksgasse 15 | 2340 Mödling
Phone +43 2236 892 666 | AUSTRIA
contact us at info@thecooltool.com